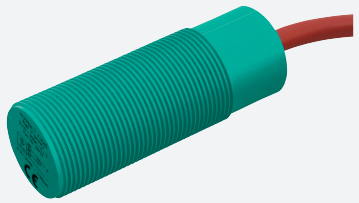

Inductive sensor

NJ10-30GK-E2-T-10M

- Temperature range
  -25 ... 100 °C (-13 ... 212 °F)
- 10 mm flush

Dimensions

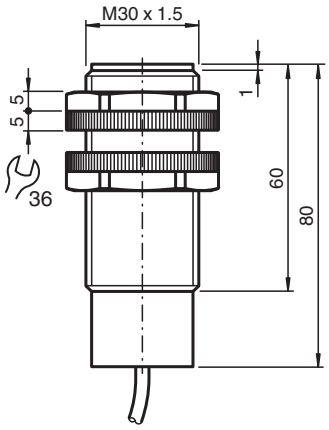

Technical Data

General specifications		
Switching function		Normally open (NO)
Output type		PNP
Rated operating distance	s_n	10 mm
Installation		flush
Output polarity		DC
Assured operating distance	s_a	0 ... 8.1 mm
Reduction factor r_{Al}		0.4
Reduction factor r_{Cu}		0.3
Reduction factor r_{304}		0.85
Output type		3-wire
Nominal ratings		
Operating voltage	U_B	10 ... 30 V
Switching frequency	f	0 ... 300 Hz
Hysteresis	H	0 ... 10 typ. %
Reverse polarity protection		reverse polarity protected
Short-circuit protection		pulsing

Release date: 2024-05-28 Date of issue: 2024-06-05 Filename: 035513_eng.pdf

Technical Data

Voltage drop	U_d	≤ 3 V
Operating current	I_L	0 ... 200 mA
No-load supply current	I_0	≤ 20 mA
Compliance with standards and directives		
Standard conformity		
Standards		EN IEC 60947-5-2
Approvals and certificates		
UL approval		cULus Listed, General Purpose
Ambient conditions		
Ambient temperature		-25 ... 100 °C (-13 ... 212 °F)
Mechanical specifications		
Connection type		cable PUR , 10 m
Core cross section		0.75 mm^2
Housing material		PBT
Sensing face		PBT
Degree of protection		IP68
Dimensions		
Length		80 mm
Diameter		30 mm

Connection

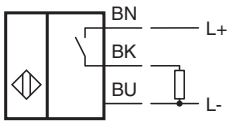

Release date: 2024-05-28 Date of issue: 2024-06-05 Filename: 035513_eng.pdf