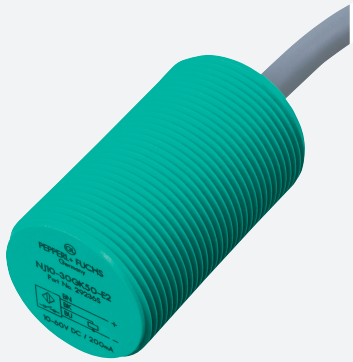

Inductive sensor

NBN15-30GK50-E0

- With increased sealing, protection class IP68 / IP69K

Dimensions

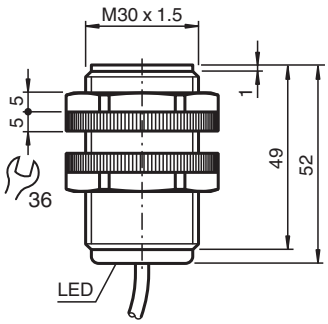

Technical Data

General specifications		
Switching function		Normally open (NO)
Output type		NPN
Rated operating distance	s_n	15 mm
Installation		non-flush
Output polarity		DC
Assured operating distance	s_a	0 ... 12.15 mm
Reduction factor r_{Al}		0.5
Reduction factor r_{Cu}		0.4
Reduction factor r_{304}		0.8
Output type		3-wire
Nominal ratings		
Operating voltage	U_B	10 ... 30 V
Switching frequency	f	0 ... 200 Hz
Reverse polarity protection		reverse polarity protected
Short-circuit protection		pulsing
Voltage drop	U_d	≤ 3 V

Release date: 2024-05-28 Date of issue: 2024-06-05 Filename: 088552_eng.pdf

Technical Data

Operating current	I_L	0 ... 200 mA
Off-state current	I_r	0 ... 0.5 mA typ. 0.1 µA
No-load supply current	I_0	≤ 15 mA
Switching state indicator		all direction LED, yellow
Compliance with standards and directives		
Standard conformity		
Standards		EN IEC 60947-5-2
Approvals and certificates		
UL approval		cULus Listed, General Purpose
CCC approval		CCC approval / marking not required for products rated ≤36 V
Ambient conditions		
Ambient temperature		-25 ... 70 °C (-13 ... 158 °F)
Mechanical specifications		
Connection type		cable PVC , 2 m
Core cross section		0.34 mm^2
Housing material		PBT
Sensing face		PBT
Degree of protection		IP68 / IP69K
Dimensions		
Length		50 mm
Diameter		30 mm
Note		use only delivered nuts

Connection

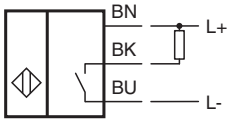

Release date: 2024-05-28 Date of issue: 2024-06-05 Filename: 088552_eng.pdf