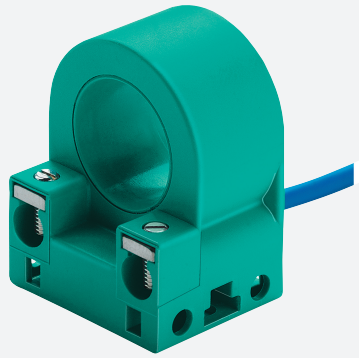

Inductive ring sensor

RC15-14-N0

- 15 mm inside diameter

Dimensions

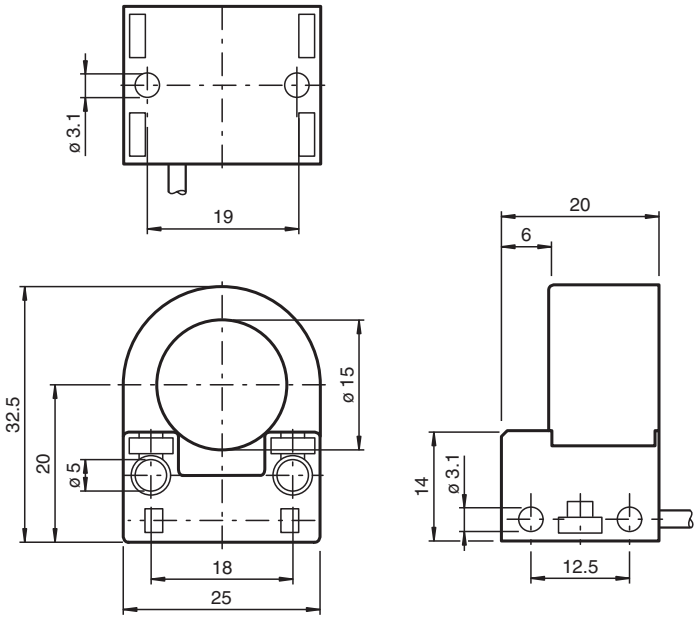

Technical Data

General specifications		
Switching function		Normally closed (NC)
Output type		NAMUR
Inside diameter		15 mm
Measuring cylinder		9S20K
Diameter		3 mm
Length		4 mm
Output type		2-wire
Nominal ratings		
Nominal voltage	U_o	8.2 V (R_i approx. 1 kΩ)
Operating voltage	U_B	5 ... 25 V
Switching frequency	f	0 ... 1500 Hz
Current consumption		

Release date: 2024-05-27 Date of issue: 2024-05-28 Filename: 095910_eng.pdf

Technical Data

Measuring plate not detected	≥ 3 mA
Measuring plate detected	≤ 1 mA
Functional safety related parameters	
$MTTF_d$	5990 a
Mission Time (T_M)	20 a
Diagnostic Coverage (DC)	0 %
Compliance with standards and directives	
Standard conformity	
NAMUR	EN 60947-5-6:2000 IEC 60947-5-6:1999
Electromagnetic compatibility	NE 21:2007
Standards	EN IEC 60947-5-2
Approvals and certificates	
ATEX approval	
Equipment protection level Gb	PTB 99 ATEX 2128 X
FM approval	
Control drawing	116-0165
UL approval	cULus Listed, General Purpose
Ambient conditions	
Ambient temperature	-20 ... 65 °C (-4 ... 149 °F)
Mechanical specifications	
Connection type	cable PVC , 2 m
Core cross section	0.14 mm^2
Housing material	PBT
Degree of protection	IP67
Cable	
Cable diameter	2.6 mm ± 0.2 mm
Bending radius	> 10 x cable diameter
Dimensions	
Height	32.5 mm
Width	25 mm
Length	20 mm
General information	
Use in the hazardous area	see instruction manuals

Connection

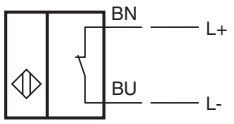

Release date: 2024-05-27 Date of issue: 2024-05-28 Filename: 095910_eng.pdf