Inductive sensor

NBB20-L2-Z4-V1

- Sensor head bidirectional and rotatable
- 20 mm flush
- 2-wire DC
- Quick mounting bracket

Dimensions

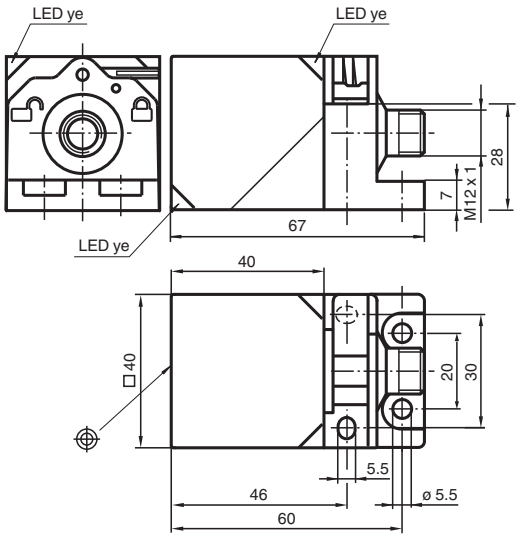

Technical Data

General specifications		
Switching function		Normally open (NO)
Output type		Two-wire
Rated operating distance	s_n	20 mm
Installation		flush
Output polarity		DC
Assured operating distance	s_a	0 ... 16.2 mm
Actual operating distance	s_r	18 ... 22 mm
Reduction factor r_{Al}		0.33
Reduction factor r_{Cu}		0.31
Reduction factor r_{304}		0.74
Reduction factor r_{Brass}		0.41
Output type		2-wire
Nominal ratings		
Operating voltage	U_B	3.8 ... 30 V DC
Switching frequency	f	0 ... 30 Hz
Reverse polarity protection		reverse polarity protected
Short-circuit protection		pulsing
Voltage drop	U_d	≤ 3.8 V
Voltage drop at I_L		

Release date: 2024-05-28 Date of issue: 2024-06-07 Filename: 182171_eng.pdf

Technical Data

Voltage drop I_L = 100 mA, switching element on	U_d	... 3.8 V
Operating current	I_L	2 ... 100 mA
Off-state current	I_r	0 ... 0.5 mA
Switching state indicator		LED, yellow
Compliance with standards and directives		
Standard conformity		
Standards		EN IEC 60947-5-2
Approvals and certificates		
UL approval		cULus Listed, General Purpose
CCC approval		CCC approval / marking not required for products rated ≤36 V
Ambient conditions		
Ambient temperature		-25 ... 70 °C (-13 ... 158 °F)
Storage temperature		-25 ... 85 °C (-13 ... 185 °F)
Mechanical specifications		
Connection type		Connector plug M12 x 1 , 4-pin
Housing material		PA
Sensing face		PA
Degree of protection		IP69K
Mass		130 g
Dimensions		
Height		40 mm
Width		40 mm
Length		67 mm

Connection

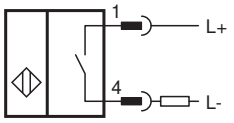

Connection Assignment

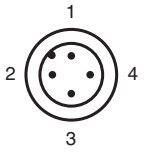

Wire colors in accordance with EN 60947-5-2

1	BN	(brown)
2	WH	(white)
3	BU	(blue)
4	BK	(black)

Release date: 2024-05-28 Date of issue: 2024-06-07 Filename: 182171_eng.pdf