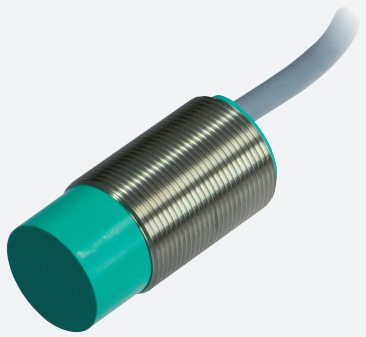

Capacitive sensor

CCN15-30GS60-A0

- 15 mm non-flush
- Operating distance adjustable via potentiometer
- High EMC resistance
- Stainless steel version
- Complementary outputs
- Operating voltage range 10 V ... 60 V DC

Dimensions

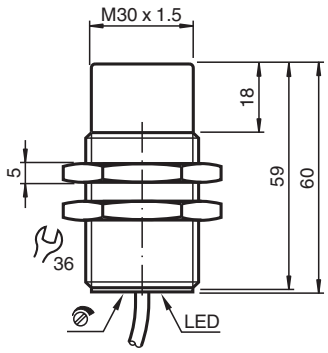

Technical Data

General specifications		
Switching function		complementary
Output type		NPN
Rated operating distance	s_n	15 mm
Installation		non-flush
Output polarity		DC
Assured operating distance	s_a	0 ... 12.1 mm
Output type		4-wire
Nominal ratings		
Installation conditions		
A		18 mm
B		10 mm
C		30 mm
F		60 mm
Operating voltage	U_B	10 ... 60 V DC
Switching frequency	f	0 ... 10 Hz
Reverse polarity protection		reverse polarity protected
Short-circuit protection		pulsing
Voltage drop	U_d	≤ 2.8 V
Operating current	I_L	0 ... 200 mA

Release date: 2024-05-27 Date of issue: 2024-05-29 Filename: 189955_eng.pdf

Technical Data

Off-state current	I_r	0 ... 0.5 mA typ. 0.1 µA at 25 °C
Off-state current T_U =40 °C, switching element off		≤ 100 µA
No-load supply current	I_0	≤ 20 mA
Time delay before availability	t_v	≤ 50 ms
Switching state indicator		LED, yellow
Indicators/operating means		
Potentiometer		sensitivity adjustment
Compliance with standards and directives		
Standard conformity		
Standards		EN IEC 60947-5-2
Approvals and certificates		
UL approval		cULus Listed, General Purpose
CCC approval		Certified by China Compulsory Certification (CCC)
Ambient conditions		
Ambient temperature		-25 ... 70 °C (-13 ... 158 °F)
Storage temperature		-40 ... 85 °C (-40 ... 185 °F)
Mechanical specifications		
Connection type		cable PVC , 2 m
Core cross section		0.75 mm^2
Housing material		Stainless steel 1.4305 / AISI 303
Sensing face		PBT
Degree of protection		IP67
Dimensions		
Length		60 mm
Diameter		30 mm

Connection

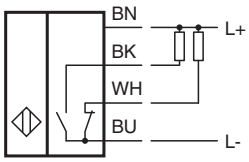

Installation

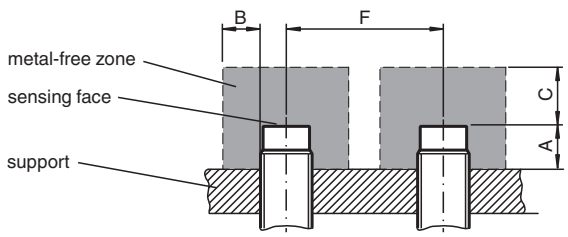

Release date: 2024-05-27 Date of issue: 2024-05-29 Filename: 189955_eng.pdf