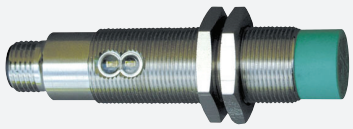

Inductive sensor
NBN15-18GM60-US-V12

- 15 mm non-flush
- 2-wire AC/DC

Dimensions

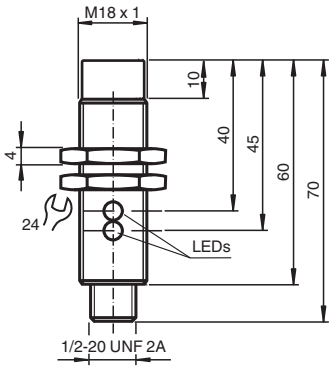

Technical Data

General specifications		
Switching function		Normally open (NO)
Output type		Two-wire
Rated operating distance	s_n	15 mm
Installation		non-flush
Output polarity		AC/DC
Reduction factor r_{Al}		0.45
Reduction factor r_{Cu}		0.4
Reduction factor r_{304}		0.7
Output type		3-wire
Nominal ratings		
Switching frequency	f	30 Hz
Hysteresis	H	3 ... 15 typ. 5 %
Reverse polarity protection		reverse polarity tolerant
Short-circuit protection		yes
Voltage drop	U_d	≤ 8 V
Rated operating current	I_e	4 ... 300 mA AC/DC
Off-state current	I_r	≤ 0.8 mA
Operating voltage indicator		LED, green
Switching state indicator		LED, yellow
Electrical specifications		
Rated operating voltage	U_e	20 ... 250 V AC/DC
Compliance with standards and directives		
Standard conformity		
Standards		EN IEC 60947-5-2
Approvals and certificates		

Release date: 2024-05-28 Date of issue: 2024-06-02 Filename: 198084_eng.pdf

Technical Data

UL approval	cULus Listed, General Purpose
CSA approval	cCSAus Listed, General Purpose
CCC approval	Certified by China Compulsory Certification (CCC)
Ambient conditions	
Ambient temperature	-25 ... 70 °C (-13 ... 158 °F)
Storage temperature	-40 ... 85 °C (-40 ... 185 °F)
Mechanical specifications	
Connection type	Connector plug 1/2"-20 UN , 3-pin
Housing material	brass, nickel-plated
Sensing face	PBT
Degree of protection	IP67
Dimensions	
Length	70 mm
Diameter	18 mm

Connection

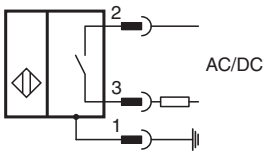

Connection Assignment

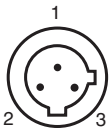

Wire colors

1	GN	(green)
2	RD/BK	(red/black)
3	RD/WH	(red/white)

Release date: 2024-05-28 Date of issue: 2024-06-02 Filename: 198084_eng.pdf