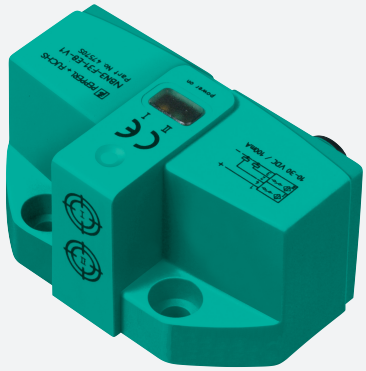

Inductive sensor

NBN3-F31-E8-V1-Y221640

- Direct mounting on standard actuators
- Fixed setting
- High EMC resistance according to EN50155 (VDE0115-200)
- Suitable for rail applications

Dimensions

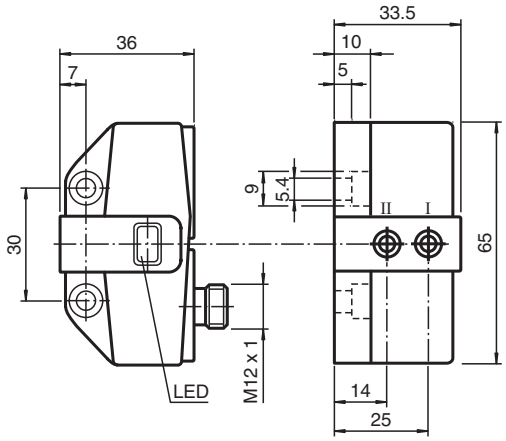

Technical Data

General specifications		
Switching function		2 x normally open (NO)
Output type		PNP
Rated operating distance	s_n	3 mm
Installation		flush mountable
Output polarity		DC
Assured operating distance	s_a	0 ... 2.43 mm
Actual operating distance	s_r	2.7 ... 3.3 mm typ.
Reduction factor r_{Al}		0.5
Reduction factor r_{Cu}		0.4
Reduction factor r_{304}		1
Reduction factor r_{St37}		1.2
Output type		3-wire
Nominal ratings		
Operating voltage	U_B	10 ... 30 V
Switching frequency	f	0 ... 500 Hz
Hysteresis	H	typ. 5 %

Release date: 2024-05-28 Date of issue: 2024-06-05 Filename: 221640_eng.pdf

Technical Data

Reverse polarity protection		all connections
Short-circuit protection		pulsing
Voltage drop	U_d	≤ 3 V
Operating current	I_L	0 ... 100 mA
Off-state current	I_r	0 ... 0.5 mA typ. 0.1 µA at 25 °C
No-load supply current	I_0	≤ 25 mA
Operating voltage indicator		LED, green
Switching state indicator		LED, yellow
Compliance with standards and directives		
Standard conformity		
Standards		EN IEC 60947-5-2
Approvals and certificates		
UL approval		cULus Listed
Ambient conditions		
Ambient temperature		-25 ... 70 °C (-13 ... 158 °F)
Mechanical specifications		
Connection (system side)		4-pin, M12 x 1 connector
Connector housing		metal
Housing material		PBT
Sensing face		PBT
Degree of protection		IP67
Tightening torque, fastening screws		4 Nm ... 5 Nm
Dimensions		
Height		33.5 mm
Width		65 mm
Length		36 mm

Connection

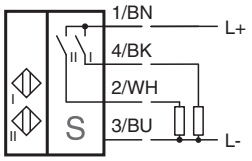

Release date: 2024-05-28 Date of issue: 2024-06-05 Filename: 221640_eng.pdf