Inductive sensor

NBB20-L2-B3B-V1

- Sensor head bidirectional and rotatable
- 20 mm flush
- A/B node with extended addressing possibility for up to 62 nodes
- NO/NC programmable
- Oscillator monitoring
- On/Off delay (disconnectable)

Dimensions

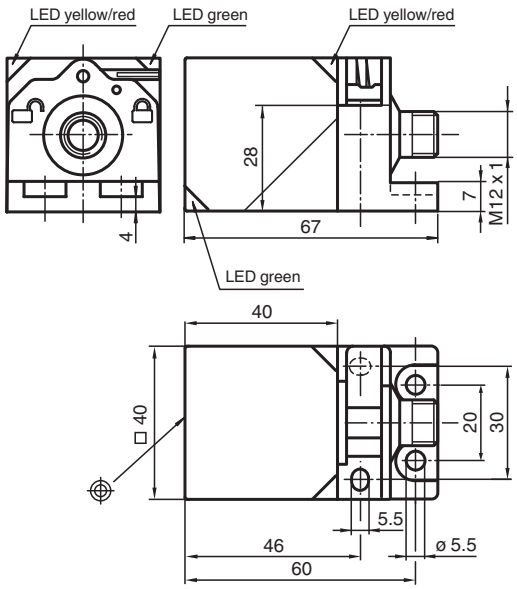

Technical Data

General specifications		
Switching function		Normally open/closed (NO/NC) programmable
Output type		AS-Interface
Rated operating distance	s_n	20 mm
Installation		flush
Assured operating distance	s_a	0 ... 16.2 mm
Reduction factor r_{Al}		0.33
Reduction factor r_{Cu}		0.31
Reduction factor r_{304}		0.74
Reduction factor r_{Brass}		0.41
Node type		A/B node
AS-Interface specification		V3.0
Required gateway specification		≥ V2.1
Output type		2-wire

Release date: 2024-05-28 Date of issue: 2024-06-06 Filename: 226318_eng.pdf

Technical Data

Nominal ratings		
Operating voltage	U_B	26.5 ... 31.9 V via AS-i bus system
Switching frequency	f	0 ... 150 Hz
Hysteresis	H	typ. 5 %
Reverse polarity protection		reverse polarity protected
No-load supply current	I_0	≤ 40 mA
Time delay before availability	t_v	≤ 1000 ms
Operating voltage indicator		LED, green
Switching state indicator		LED, yellow
Error indicator		LED, red
Functional safety related parameters		
$MTTF_d$		1330 a
Mission Time (T_M)		20 a
Diagnostic Coverage (DC)		0 %
Compliance with standards and directives		
Standard conformity		
Standards		EN IEC 60947-5-2
Approvals and certificates		
UL approval		cULus Listed, General Purpose
CCC approval		CCC approval / marking not required for products rated ≤36 V
Ambient conditions		
Ambient temperature		-25 ... 70 °C (-13 ... 158 °F)
Storage temperature		-40 ... 85 °C (-40 ... 185 °F)
Mechanical specifications		
Connection type		Connector plug M12 x 1 , 4-pin
Housing material		PA
Sensing face		PA
Degree of protection		IP69K
Mass		130 g
Dimensions		
Height		40 mm
Width		40 mm
Length		67 mm

Connection

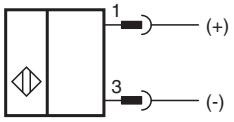

Connection Assignment

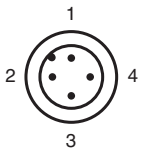

Release date: 2024-05-28 Date of issue: 2024-06-06 Filename: 226318_eng.pdf

Additional Information

Programming Instructions

Adress 00	preset, alterable via Busmaster or programming units
IO-Code	0
ID-Code	A
ID1-Code	7
ID2-Code	E

Data bit

Bit	Function
D0	switching state[1)] (0 = damped; 1 = undamped)
D1	not used
D2	oscillator monitoring (0= oscillator defective, 1=normal operation)
D3	not used

Parameter bit

Bit	Function
P0	ON / Off delay activated* / deactivated
P1	switching element function[2)] (0 = NC; 1 = NO)
P2	not used
P3	not used

1) Applies to NO funktion (P1 = 1; preset),
with NC function (P1 = 0) reversed characteristics
2) Default setting: NO

Release date: 2024-05-28 Date of issue: 2024-06-06 Filename: 226318_eng.pdf

Operation

Indication depending on the operation mode

Symptoms	green LED (POWER)	red LED (FAULT)	Data bit D2
normal operation	on	off	1
Oscillator defect	flashing	flashing	0
no communication	off	on	1

On/off delay:

The on/off delay is preset and switched on (P0=1). On delay approx.15 ms, when P0=1 and NO function (P1=1). Off delay approx.15 ms, when P0=1 and NC function (P1=0).

Release date: 2024-05-28 Date of issue: 2024-06-06 Filename: 226318_eng.pdf