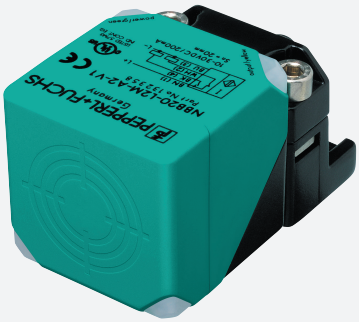

Inductive sensor

NBN40-L2M-A0-V1-M

- Sensor head bidirectional and rotatable
- 40 mm non-flush
- E1-Type approval
- Extended temperature range -40 ... +85 °C
- 4 LEDs indicator for 360° visibility

Dimensions

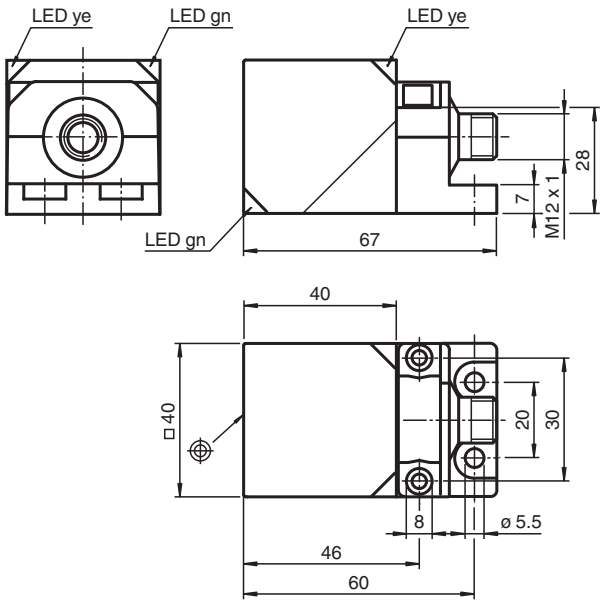

Technical Data

General specifications		
Switching function		complementary
Output type		NPN
Rated operating distance	s_n	40 mm
Installation		non-flush
Output polarity		DC
Assured operating distance	s_a	0 ... 32.4 mm
Actual operating distance	s_r	36 ... 44 mm
Reduction factor r_{Al}		0.34
Reduction factor r_{Cu}		0.3

Release date: 2024-05-27 Date of issue: 2024-05-29 Filename: 237703_eng.pdf

Technical Data

Reduction factor r_{304}		0.81
Reduction factor r_{St37}		1
Reduction factor r_{Brass}		0.4
Output type		4-wire
Nominal ratings		
Operating voltage	U_B	10 ... 60 V DC
Switching frequency	f	0 ... 150 Hz
Hysteresis	H	typ. 5 %
Reverse polarity protection		reverse polarity protected
Short-circuit protection		pulsing
Voltage drop	U_d	≤ 2 V
Operating current	I_L	0 ... 200 mA
Off-state current	I_r	0 ... 0.5 mA
No-load supply current	I_0	≤ 20 mA
Operating voltage indicator		LED, green
Switching state indicator		LED, yellow
Functional safety related parameters		
$MTTF_d$		670 a
Mission Time (T_M)		20 a
Diagnostic Coverage (DC)		0 %
Compliance with standards and directives		
Standard conformity		
Standards		EN IEC 60947-5-2
Approvals and certificates		
UL approval		cULus Listed, General Purpose
CCC approval		Certified by China Compulsory Certification (CCC)
E1 Type approval		10R-04
Ambient conditions		
Ambient temperature		-40 ... 85 °C (-40 ... 185 °F)
Mechanical specifications		
Connection type		Connector plug M12 x 1 , 4-pin
Housing material		PA-GF35 metal base powder coated metal mounting flang powder coated.
Sensing face		PA-GF35
Degree of protection		IP69K
Mass		130 g
Dimensions		
Height		40 mm
Width		40 mm
Length		67 mm

Connection

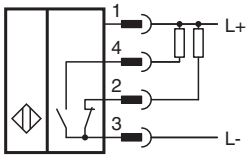

Release date: 2024-05-27 Date of issue: 2024-05-29 Filename: 237703_eng.pdf

Mounting

Emitted interference and interference immunity in accordance with motor vehicle directive 2006/28/EG (e1 Type approval)
Interference immunity in accordance with DIN ISO 11452-2: 100 V/m
Frequency band 20 MHz up to 2 GHz

Mains-borne interference in accordance with ISO

7637-2: Pulse	1	2a	2b	3 a	3b	4	5
Severity level	III	III	III	III	III	III	IV
Failure criterion	C	A	C	A	A	A	C

EN 61000-4-2:	CD: 8 kV /	AD: 15 kV
Severity level	IV	IV
EN 61000-4-3:	30 V/m (80...2500 MHz)	
Severity level	IV	
EN 61000-4-4:	2 kV	
Severity level	III	
EN 61000-4-6:	10 V (0.01...80 MHz)	
Severity level	III	
EN 55011:	Class A	

Release date: 2024-05-27 Date of issue: 2024-05-29 Filename: 237703_eng.pdf