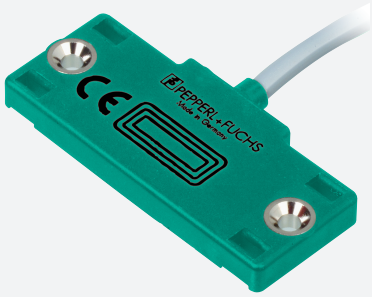

Capacitive sensor

CBN10-F46-E2-0,4M-V3

- 10 mm non-flush
- 3-wire DC
- Flat housing
- Mounting slots for cable ties
- Cable with M8 plug

Dimensions

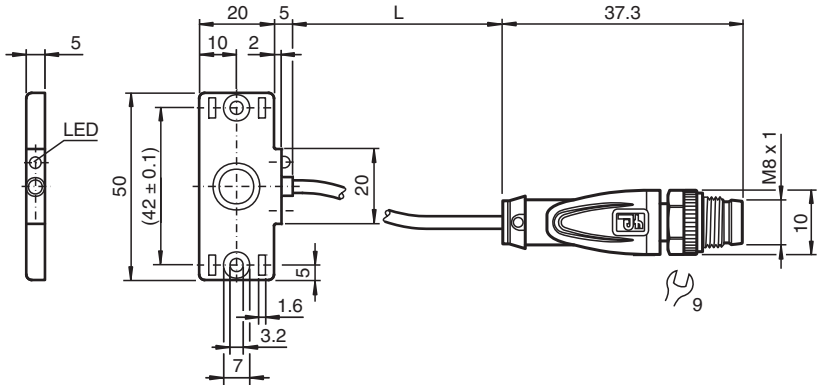

Technical Data

General specifications		
Switching function		Normally open (NO)
Output type		PNP
Rated operating distance	s_n	10 mm
Installation		non-flush
Output polarity		DC
Assured operating distance	s_a	0 ... 7 mm
Output type		3-wire
Nominal ratings		
Installation conditions		
B		5 mm
C		20 mm
F		20 mm / 50 mm
Operating voltage	U_B	10 ... 30 V DC
Switching frequency	f	0 ... 5 Hz
Hysteresis	H	1 ... 10 typ. 5 %
Reverse polarity protection		reverse polarity protected
Short-circuit protection		pulsing
Voltage drop	U_d	≤ 2 V
Voltage drop at I_L		

Release date: 2024-05-28 Date of issue: 2024-06-02 Filename: 259577_eng.pdf

Technical Data

Voltage drop I_L = 10 mA, switching element on	U_d	0.8 ... 2.2 V typ. 1.4 V
Operating current	I_L	0 ... 100 mA
Lowest operating current	I_m	0 mA
Off-state current	I_r	0 ... 0.5 mA typ. 0.01 mA
Off-state current T_U =40 °C, switching element off		≤ 100 µA
No-load supply current	I_0	≤ 15 mA
Time delay before availability	t_v	≤ 50 ms
Switching state indicator		LED, yellow
Functional safety related parameters		
$MTTF_d$		1210 a
Mission Time (T_M)		20 a
Diagnostic Coverage (DC)		0 %
Compliance with standards and directives		
Standard conformity		
Standards		EN IEC 60947-5-2
Approvals and certificates		
UL approval		cULus Listed, General Purpose, Class 2 Power Source
CCC approval		CCC approval / marking not required for products rated ≤36 V
Ambient conditions		
Ambient temperature		-25 ... 70 °C (-13 ... 158 °F)
Storage temperature		-40 ... 85 °C (-40 ... 185 °F)
Mechanical specifications		
Connection type		fixed cable with plug
Housing material		PBT
Sensing face		PBT
Degree of protection		IP67
Connector		
Threading		M8 x 1
Tightening torque		0.4 Nm
Number of pins		3
Cable		
Cable diameter		3.5 mm ± 0.2 mm
Bending radius		> 10 x cable diameter
Material		PVC
Color		grey
Number of cores		3
Core cross section		0.14 mm^2
Length	L	0.4 m
Mass		25 g
Dimensions		
Height		5 mm
Width		50 mm
Length		25 mm

Release date: 2024-05-28 Date of issue: 2024-06-02 Filename: 259577_eng.pdf

Connection

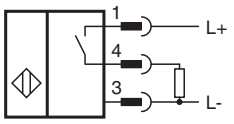

Connection Assignment

Wire colors in accordance with EN 60947-5-2

1	BN	(brown)
3	BU	(blue)
4	BK	(black)

Installation Conditions

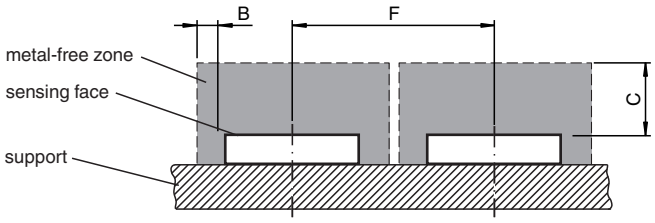

Release date: 2024-05-28 Date of issue: 2024-06-02 Filename: 259577_eng.pdf