Capacitive sensor

CBN15-F64-A2

- 15 mm non-flush
- Flat housing
- Switching distance adjustable between 2 mm ... 15 mm

Dimensions

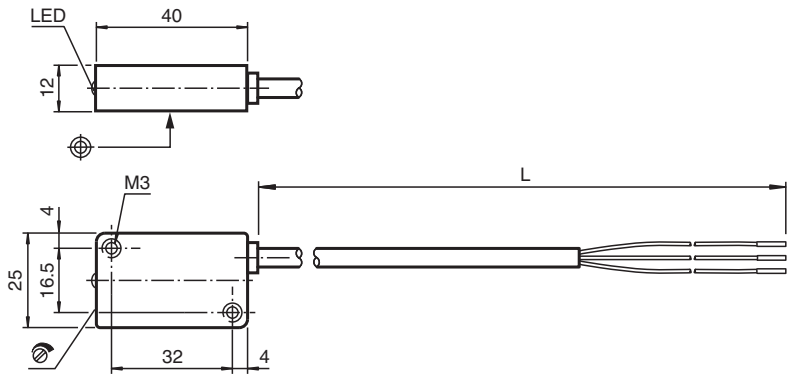

Technical Data

General specifications		
Switching function		complementary
Output type		PNP
Rated operating distance	s_n	15 mm
Installation		non-flush
Output polarity		DC
Assured operating distance	s_a	0 ... 10.8 mm
Actual operating distance	s_r	13.5 ... 16.5 mm
Output type		4-wire
Nominal ratings		
Installation conditions		
B		15 mm
C		30 mm
F		45 mm / 60 mm
Operating voltage	U_B	10 ... 30 V DC
Switching frequency	f	0 ... 100 Hz
Hysteresis	H	1 ... 10 typ. 5 %

Release date: 2024-06-04 Date of issue: 2024-06-04 Filename: 263265_eng.pdf

Technical Data

Reverse polarity protection		reverse polarity protected
Short-circuit protection		pulsing I_{max} ≤ 500 mA
Voltage drop	U_d	≤ 2 V
Repeat accuracy	R	≤ 1.5 mm
Operating current	I_L	0 ... 100 mA
Off-state current	I_r	0 ... 50 µA typ. 5 µA
No-load supply current	I_0	≤ 15 mA
Switching state indicator		LED, yellow
Functional safety related parameters		
$MTTF_d$		941 a
Mission Time (T_M)		20 a
Diagnostic Coverage (DC)		0 %
Indicators/operating means		
Potentiometer		sensitivity adjustment
Compliance with standards and directives		
Standard conformity		
Standards		EN IEC 60947-5-2
Approvals and certificates		
UL approval		cULus Listed, General Purpose
CCC approval		CCC approval / marking not required for products rated ≤36 V
Ambient conditions		
Ambient temperature		-25 ... 70 °C (-13 ... 158 °F)
Storage temperature		-40 ... 85 °C (-40 ... 185 °F)
Pollution degree		3
Mechanical specifications		
Connection type		cable PUR , L = 2 m
Core cross section		0.34 mm^2
Housing material		PBT
Sensing face		PBT
Degree of protection		IP67
Cable		
Cable diameter		4.8 mm ± 0.2 mm
Bending radius		> 10 x cable diameter
Tightening torque, housing screws		≤ 2 Nm
Dimensions		
Height		12 mm
Width		25 mm
Length		40 mm
Note		Screw-in depth of housing screws, max. 8 mm

Connection

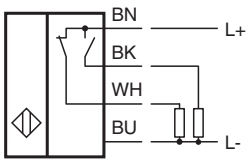

Release date: 2024-06-04 Date of issue: 2024-06-04 Filename: 263265_eng.pdf

Installation Conditions

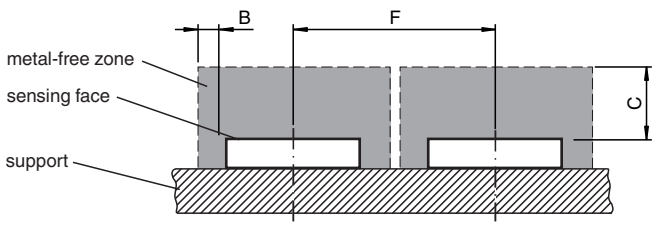

Release date: 2024-06-04 Date of issue: 2024-06-04 Filename: 263265_eng.pdf