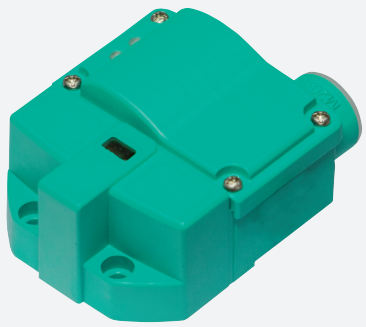

Inductive sensor

NBN3-F31K-Z8

- Direct mounting on standard actuators
- Fixed setting

Dimensions

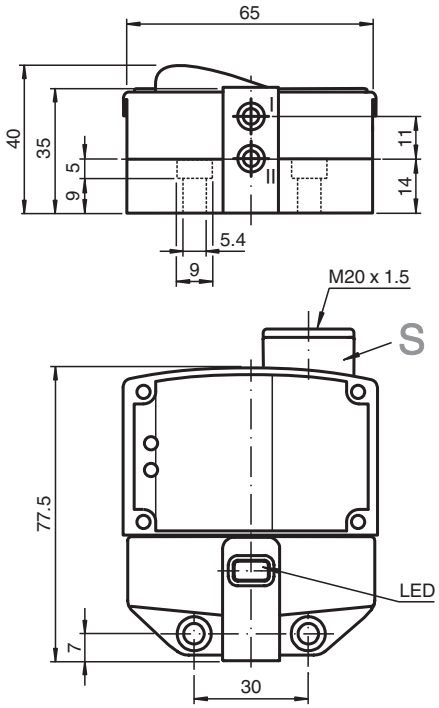

Technical Data

General specifications		
Switching function		2 x normally open (NO)
Output type		Two-wire
Rated operating distance	s_n	3 mm
Installation		flush mountable
Output polarity		DC
Assured operating distance	s_a	0 ... 2.43 mm
Actual operating distance	s_r	2.7 ... 3.3 mm typ. 3 mm
Reduction factor r_{Al}		0.5
Reduction factor r_{Cu}		0.4

Release date: 2024-05-28 Date of issue: 2024-06-04 Filename: 282690_eng.pdf

Technical Data

Reduction factor r_{304}		1
Reduction factor r_{St37}		1.1
Output type		4-wire
Nominal ratings		
Operating voltage	U_B	6 ... 60 V DC
Switching frequency	f	0 ... 500 Hz
Hysteresis	H	typ. 5 %
Reverse polarity protection		reverse polarity tolerant
Short-circuit protection		pulsing
Voltage drop	U_d	≤ 5.5 V
Operating current	I_L	4 ... 100 mA
Lowest operating current	I_m	4 mA
Off-state current	I_r	0.5 ... 0.9 mA typ. 0.65 mA
Time delay before availability	t_v	≤ 40 ms
Switching state indicator		LED, yellow
Limit data		
Tightening torque, fastening screws		0.4 Nm
Functional safety related parameters		
$MTTF_d$		570 a
Mission Time (T_M)		20 a
Diagnostic Coverage (DC)		0 %
Compliance with standards and directives		
Standard conformity		
Standards		EN IEC 60947-5-2
Approvals and certificates		
UL approval		cULus Listed, General Purpose, Class 2 Power Source
CCC approval		Certified by China Compulsory Certification (CCC)
Ambient conditions		
Ambient temperature		-25 ... 70 °C (-13 ... 158 °F)
Mechanical specifications		
Connection (system side)		Cage tension spring terminals
Core cross section (system side)		1.5/2.5 mm^2 flexible/rigid
Housing material		PBT
Sensing face		PBT
Degree of protection		IP67
Mass		174 g
Tightening torque, fastening screws		4 Nm ... 5 Nm
Tightening torque, housing screws		1 Nm
Tightening torque, cable gland		M20 x 1.5 ; max. 7 Nm
Dimensions		
Height		35 mm
Width		65 mm
Length		77.5 mm

Connection

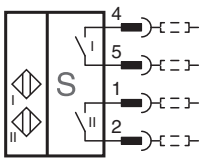

Release date: 2024-05-28 Date of issue: 2024-06-04 Filename: 282690_eng.pdf