Inductive sensor

NBB15-30GM50-E1-V1-M1

- 15 mm flush
- Increased operating distance
- Extended temperature range -40 ... +85 °C
- With increased sealing, protection class IP68 / IP69K
- E1-Type approval

Dimensions

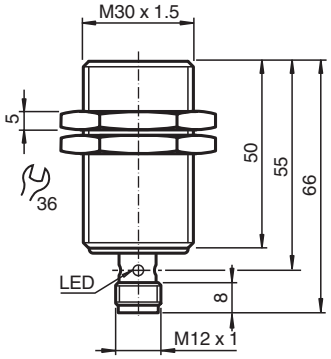

Technical Data

General specifications		
Switching function		Normally closed (NC)
Output type		NPN
Rated operating distance	s_n	15 mm
Installation		flush
Output polarity		DC
Assured operating distance	s_a	0 ... 12.15 mm
Actuating element		mild steel, e. g. 1.0037, SR235JR (formerly St37-2) 45 mm x 45 mm x 1 mm
Reduction factor r_{Al}		0.45
Reduction factor r_{Cu}		0.4
Reduction factor r_{304}		0.7
Reduction factor r_{Brass}		0.5
Output type		3-wire
Nominal ratings		
Operating voltage	U_B	7 ... 30 V
Switching frequency	f	0 ... 500 Hz
Hysteresis	H	typ. 5%

Release date: 2024-05-27 Date of issue: 2024-05-31 Filename: 293454-0033_eng.pdf

Technical Data

Reverse polarity protection		reverse polarity protected
Short-circuit protection		pulsing
Voltage drop	U_d	≤ 2 V
Operating current	I_L	0 ... 200 mA
Off-state current	I_r	0 ... 0.5 mA typ. 4 µA at 25 °C
No-load supply current	I_0	≤ 10 mA
Time delay before availability	t_v	≤ 100 ms
Switching state indicator		LED, yellow
Functional safety related parameters		
$MTTF_d$		1494 a
Mission Time (T_M)		20 a
Diagnostic Coverage (DC)		0 %
Compliance with standards and directives		
Standard conformity		
Standards		EN IEC 60947-5-2
Approvals and certificates		
UL approval		cULus Listed, General Purpose, Class 2 Power Source
CCC approval		CCC approval / marking not required for products rated ≤36 V
E1 Type approval		10R-04
Ambient conditions		
Ambient temperature		-40 ... 85 °C (-40 ... 185 °F)
Storage temperature		-40 ... 85 °C (-40 ... 185 °F)
Mechanical specifications		
Connection type		Connector plug M12 x 1 , 3-pin
Housing material		brass, nickel-plated
Sensing face		PBT
Degree of protection		IP68 / IP69K
Mass		115 g
Dimensions		
Length		66 mm
Diameter		30 mm
General information		
Scope of delivery		2 self locking nuts in scope of delivery

Connection

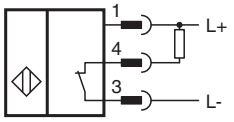

Connection Assignment

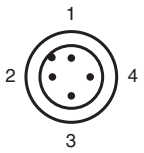

Release date: 2024-05-27 Date of issue: 2024-05-31 Filename: 293454-0033_eng.pdf

Connection Assignment

Wire colors in accordance with EN 60947-5-2

1	BN	(brown)
2	WH	(white)
3	BU	(blue)
4	BK	(black)

Technical Features

Mains-borne interference in accordance with ISO 7637-2:

Pulse	1	2a	2b	3a	3b	4
Severity level	III	III	III	III	III	III
Failure criterion	A	A	C	A	A	C

EN 61000-4-2:	CD: 8 kV /	AD: 15 kV
Severity level	IV	IV
EN 61000-4-3:	36 V/m (80...2500 MHz)	
Severity level	IV	
EN 61000-4-4:	2 kV	
Severity level	III	
EN 61000-4-6:	30 V (0.01...80 MHz)	
Severity level	III	
EN 55011:	Class A	

Release date: 2024-05-27 Date of issue: 2024-05-31 Filename: 293454-0033_eng.pdf