Power Supply

PS1000-A6-24.20

- 100 V AC to 240 V AC wide-range input
- Output 24 V DC, 20 A, 480 W, 1-phase
- Housing width 48 mm
- Efficiency up to 95.6 %
- Minimal inrush current surge
- DC OK relay contact
- Current sharing for parallel use
- Suitable for Zone 2/Div. 2 mounting

Function

The device is used to supply field devices with 24 V DC and 20 A.
It is possible to select between the operating modes "parallel use" and "single use". Plug in the plug-in jumper to set the operating mode "parallel use". Do not plug in the plug-in jumper to set the operating mode "single use".
The device status is indicated by an LED.
The device has a relay contact output for remote monitoring.
The device is mounted on a 35 mm DIN mounting rail according to EN 60715.

Application

Parallel Use
Link the two terminal poles when power supplies are connected in parallel. In order to achieve a sharing of the load current between the individual power supplies, the "parallel use" regulates the output voltage in such a manner that the voltage at no load is approx. 4 % higher than at nomina load.

Connection

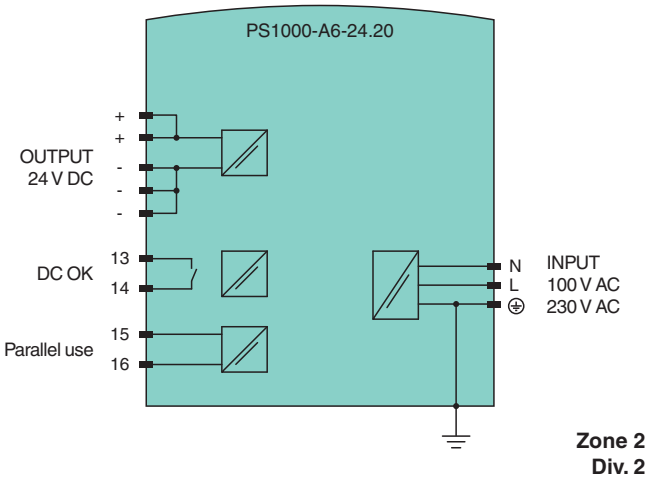

Technical Data

Electrical specifications	
Efficiency	94.2 % at 120 V AC 95.6 % at 230 V AC
Power dissipation	29.6 W at 120 V AC 22.1 W at 230 V AC
Input	

Release date: 2024-05-03 Date of issue: 2024-05-03 Filename: 70103523_eng.pdf

Technical Data

Voltage range		100 ... 240 V AC (-15 %/+10 %), 50 ... 60 Hz (±6 %) 110 ... 150 V DC (±20 %)
Current		4.26 A at 120 V AC 2.23 A at 230 V AC 4.64 A at 110 V DC for lower output currents see technical information
Inrush current		10 A peak at 120 V AC, temperature independent 4.5 A peak at 230 V AC, temperature independent
Capacity factor		0.99 at 120 V AC 0.98 at 230 V AC
Output		
Rated voltage	U_r	24 V DC
Voltage range		24 ... 28 V DC factory setting: 24.1 V
Rated current	I_r	20 A
Current		24 ... 20.6 A at ambient temperature < 45 °C (113 °F) 20 ... 17.1 A at ambient temperature 60 °C (140 °F) 15 ... 13 A at ambient temperature 70 °C (158 °F) linear power derating see technical information
Power		480 W
Ripple		max. 50 mV_{pp}
Hold-up time		32 ms at 120 V AC 32 ms at 230 V AC
Overload behavior		continuous current : output voltage > 13 V DC intermittent current : output voltage < 13 V DC
Short-circuit current		typ. 29 A intermitted current peak value for typ. 2 s
Voltage limitation		typ. 30.5 V DC max. 32 V DC
Fault indication output		
Connection		terminals 13, 14
Output type		relay contact DC OK - contact is closed if the output voltage is > 90 % of the adjusted output voltage
Contact loading		max. 60 V DC/0.3 A ; 30 V DC/1 A ; 30 V AC/0.5 A resistive load min. 1 mA at 5 V DC
Galvanic isolation		
Input/Output		SELV/PELV
Indicators/settings		
Display elements		LED green: status DC OK - LED lights up if the output voltage is > 90 % of the adjusted output voltage
Control elements		potentiometer , plug-in jumper
Configuration		setting of the output voltage via potentiometer setting of the operating mode - plug-in jumper plugged in: "parallel use" operating mode - plug-in jumper not plugged in: "single use" operating mode
Directive conformity		
Electromagnetic compatibility		
Directive 2014/30/EU		IEC/EN 61000-6-1 , IEC/EN 61000-6-2 , IEC/EN 61000-6-3 , IEC/EN 61000-6-4 , IEC/EN 61000-3-2 , IEC/EN 61000-3-3
Low voltage		
Directive 2014/35/EU		EN 61010-1
RoHS		
Directive 2011/65/EU (RoHS)		IEC/EN 63000:2019
Conformity		
Degree of protection		EN 60529
Shock resistance		EN 60068-2-27
Vibration resistance		EN 60068-2-6
Ambient conditions		
Ambient temperature		-25 ... 70 °C (-13 ... 158 °F) , see technical information
Storage temperature		-40 ... 85 °C (-40 ... 185 °F)
Relative humidity		5 ... 95 %, noncondensing

Release date: 2024-05-03 Date of issue: 2024-05-03 Filename: 70103523_eng.pdf

Technical Data

Shock resistance	20 g , 11 ms or 30 g , 6 ms
Vibration resistance	2 ... 17.8 Hz : ± 1.6 mm , 17.8 ... 500 Hz : 2 g
Corrosion resistance	IEC 60068-2-60, Method 4 ISA-71.04, severity level G3
Mechanical specifications	
Housing material	aluminum alloy , galvanized steel
Degree of protection	IP20
Connection	
Input/Output	screw terminals conductor cross section: max. 6 mm^2 (AWG 20-10) cable diameter: max. 2.8 mm, wire end ferrules included stripped insulation length: 7 mm tightening torque: max. 1 Nm
Relay contact output	spring terminals with push-in connection technology conductor cross section: max. 1.5 mm^2 (AWG 24-16) cable diameter: max. 1.6 mm, wire end ferrules included stripped insulation length: 7 mm
Mass	approx. 830 g
Dimensions	48 x 124 x 127 mm , without plugs and without DIN mounting rail
Height	124 mm
Width	48 mm
Depth	127 mm
Mounting	on 35 mm DIN mounting rail acc. to EN 60715:2001
Data for application in connection with hazardous areas	
ATEX approval	
ATEX certificate	EPS 17 ATEX 1 089 X
ATEX marking	Ⓔx II 3G Ex ec nC II T4 Gc
Directive conformity	
Directive 2014/34/EU	EN 60079-0:2012+A11:2013 , EN 60079-7:2015 , EN 60079-15:2010
International approvals	
UL approval	E350173 , E223176
IECEx approval	
IECEx certificate	IECEx EPS 20.0056X
IECEx marking	Ex ec nC IIC T4 Gc
Standards	IEC 60079-0:2011 , IEC 60079-7:2015 , IEC 60079-15:2010
General information	
Supplementary information	Observe the certificates, declarations of conformity, instruction manuals, and manuals where applicable. For information see www.pepperl-fuchs.com.

Release date: 2024-05-03 Date of issue: 2024-05-03 Filename: 70103523_eng.pdf

Assembly

Front view

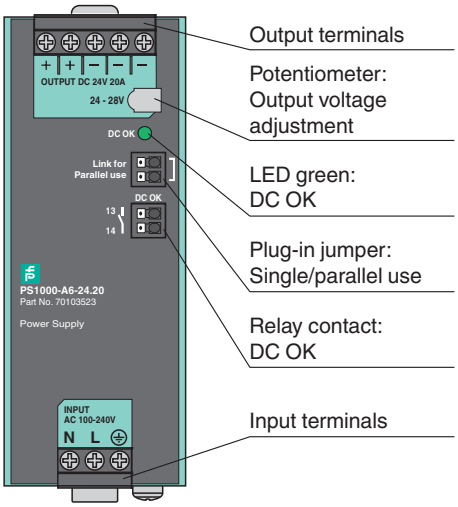

Installation Conditions

Mount the device on the DIN mounting rail so that the input terminals are located on the bottom of the device.

This device is designed for convection cooling and does not require an external ventilator. Do not obstruct airflow. Do not cover the ventilation grid by more than 15 %, e. g. cable ducts.

If you load the device with more than 50 % of the rated power permanently keep the following mounting distances:

- 40 mm above
- 20 mm below
- 5 mm on the left and right side

Increase this distance to 15 mm if the adjacent device is a heat source, e. g. another power supply.

Release date: 2024-05-03 Date of issue: 2024-05-03 Filename: 70103523_eng.pdf