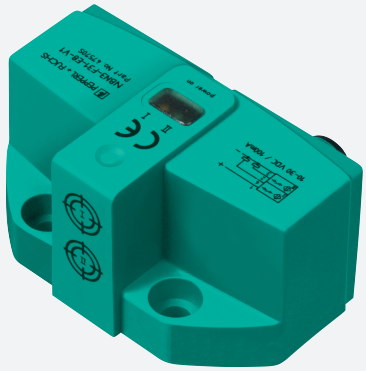

Inductive sensor

NCN3-F31-N4-V1-Y223958

- Direct mounting on standard actuators
- Fixed setting
- Usable up to SIL 2 acc. to IEC 61508
- ATEX &IECEX certifications

Dimensions

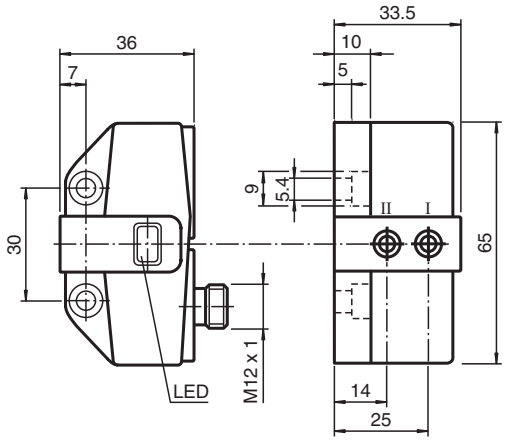

Technical Data

General specifications		
Switching function		2 x normally closed (NC)
Output type		NAMUR
Rated operating distance	s_n	3 mm
Installation		flush mountable
Assured operating distance	s_a	0 ... 2.4 mm
Actual operating distance	s_r	2.7 ... 3.3 mm typ.
Actuating element		Stainless steel 1.4305 / AISI 303 8.5 mm x 8.5 mm x 0.5 mm
Reduction factor r_{Al}		0.5
Reduction factor r_{Cu}		0.4
Reduction factor r_{304}		1
Reduction factor r_{St37}		1.3
Reduction factor r_{Brass}		0.6
Output type		2-wire
Nominal ratings		
Nominal voltage	U_o	8.2 V (R_i approx. 1 kΩ)

Release date: 2024-05-27 Date of issue: 2024-05-29 Filename: 70133032_eng.pdf

Technical Data

Switching frequency	f	0 ... 3 kHz
Hysteresis	H	typ. 5 %
Reverse polarity protection		reverse polarity protected
Short-circuit protection		yes
Suitable for 2:1 technology		yes , Reverse polarity protection diode not required
Current consumption		
Measuring plate not detected		min. 3 mA
Measuring plate detected		≤ 1 mA
Time delay before availability	t_v	≤ 1.1 ms
Switching state indicator		LED, yellow
Functional safety related parameters		
Safety Integrity Level (SIL)		SIL 2
$MTTF_d$		1470 a
Mission Time (T_M)		20 a
Diagnostic Coverage (DC)		0 %
Compliance with standards and directives		
Standard conformity		
NAMUR		EN 60947-5-6:2000 IEC 60947-5-6:1999
Electromagnetic compatibility		NE 21:2007
Standards		EN IEC 60947-5-2
Approvals and certificates		
IECEx approval		
Equipment protection level Ga		IECEx TUN 17.0021X
Equipment protection level Gb		IECEx TUN 17.0021X
Equipment protection level Da		IECEx TUN 17.0021X
Equipment protection level Mb		IECEx TUN 17.0021X
ATEX approval		
Equipment protection level Ga		TÜV 99 ATEX 1479 X
Equipment protection level Gb		TÜV 99 ATEX 1479 X
Equipment protection level Da		TÜV 99 ATEX 1479 X
UL approval		cULus Listed, General Purpose
CCC approval		
Hazardous Location		2020322315002262
NEPSI approval		
NEPSI certificate		GYJ19.1410X
Ambient conditions		
Ambient temperature		-25 ... 100 °C (-13 ... 212 °F)
Storage temperature		-40 ... 100 °C (-40 ... 212 °F)
Mechanical specifications		
Connection (system side)		4-pin, M12 x 1 connector
Connector housing		metal
Housing material		PBT
Sensing face		PBT
Degree of protection		IP67
Tightening torque, fastening screws		4 Nm ... 5 Nm
Dimensions		
Height		33.5 mm
Width		65 mm
Length		36 mm
General information		
Use in the hazardous area		see instruction manuals

Release date: 2024-05-27 Date of issue: 2024-05-29 Filename: 70133032_eng.pdf

Connection

N4-Y

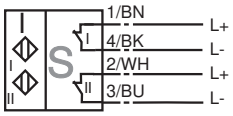

Release date: 2024-05-27 Date of issue: 2024-05-29 Filename: 70133032_eng.pdf