Inductive sensor

NBN4-F29-A2

- 4 mm non-flush
- 4-wire DC

Dimensions

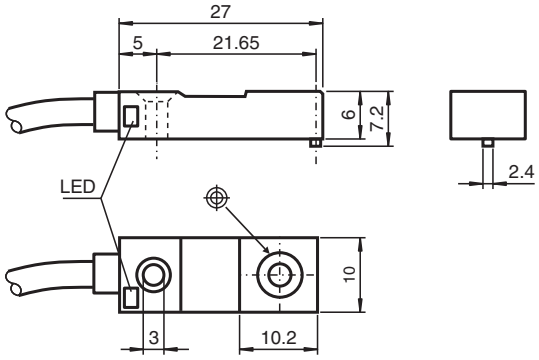

Technical Data

General specifications		
Switching function		complementary
Output type		PNP
Rated operating distance	s_n	4 mm
Installation		non-flush
Output polarity		DC
Assured operating distance	s_a	0 ... 3.24 mm
Reduction factor r_{Al}		0.4
Reduction factor r_{Cu}		0.3
Reduction factor r_{304}		0.7
Output type		4-wire
Nominal ratings		
Operating voltage	U_B	4.75 ... 30 V DC
Switching frequency	f	0 ... 1000 Hz
Hysteresis	H	typ. 5 %
Reverse polarity protection		reverse polarity protected
Short-circuit protection		pulsing
Voltage drop	U_d	≤ 2 V
Operating current	I_L	0 ... 100 mA
Off-state current	I_r	0 ... 0.5 mA typ. 0.1 µA at 25 °C

Release date: 2024-05-28 Date of issue: 2024-06-02 Filename: 802784_eng.pdf

Technical Data

No-load supply current	I_0	≤ 15 mA
Time delay before availability	t_v	≤ 5 ms
Switching state indicator		LED, yellow
Functional safety related parameters		
$MTTF_d$		1680 a
Mission Time (T_M)		20 a
Diagnostic Coverage (DC)		0 %
Compliance with standards and directives		
Standard conformity		
Standards		EN IEC 60947-5-2
Approvals and certificates		
UL approval		cULus Listed, General Purpose
CCC approval		CCC approval / marking not required for products rated ≤36 V
Ambient conditions		
Ambient temperature		-25 ... 70 °C (-13 ... 158 °F)
Storage temperature		-40 ... 85 °C (-40 ... 185 °F)
Mechanical specifications		
Connection type		cable PVC , 2 m
Core cross section		0.14 mm^2
Housing material		PPS
Sensing face		PPS
Degree of protection		IP67
Cable		
Cable diameter		3 mm + 0.3 mm
Bending radius		> 10 x cable diameter
Dimensions		
Height		6 mm
Width		10 mm
Length		27 mm

Connection

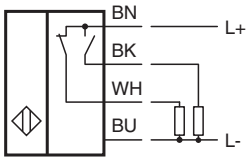

Release date: 2024-05-28 Date of issue: 2024-06-02 Filename: 802784_eng.pdf