0 10 20 30 40 50 60 70 80 90 100 Vergleichsmaßstab / standard of comparison

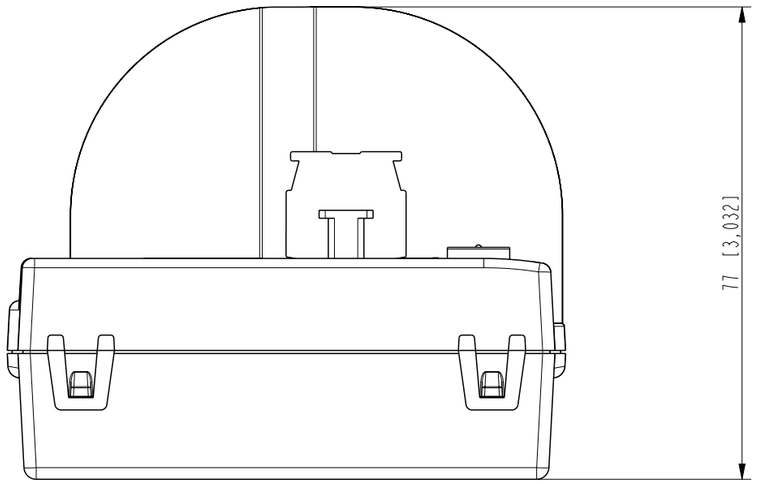

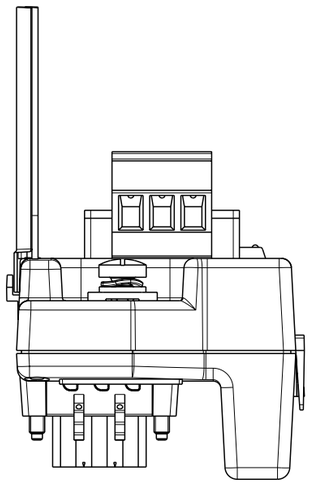

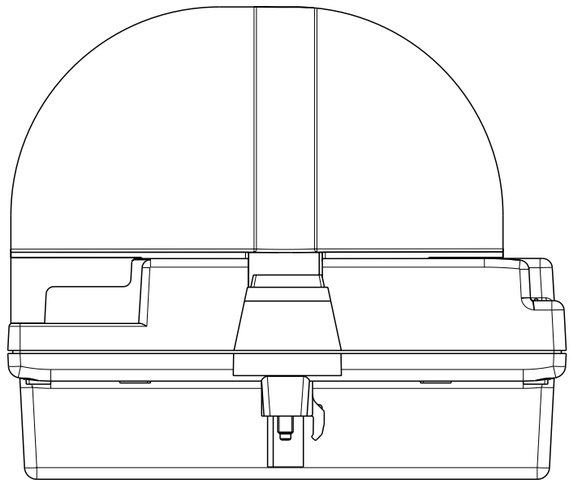

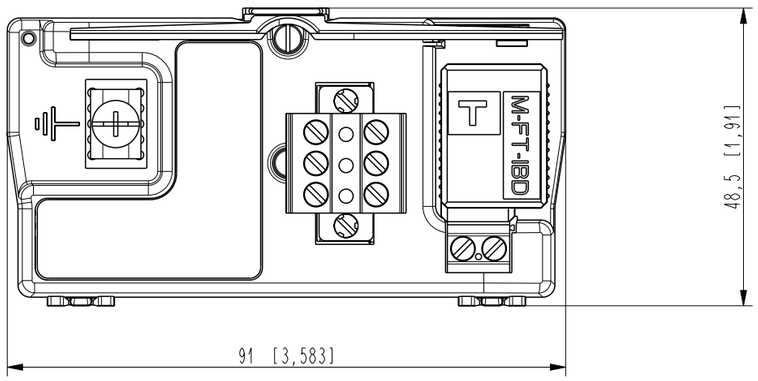

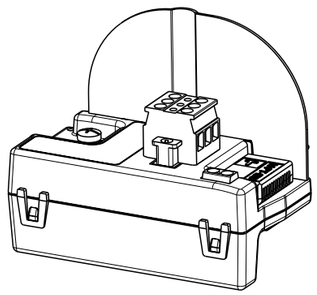

1:2

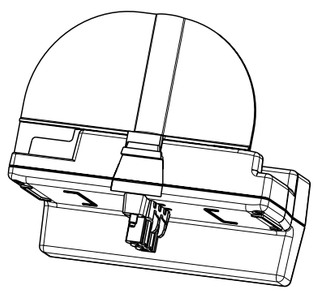

1:2

product		dimensions without tolerances follow	surface description acc.	-	-	-
device		-		-	-	-
				material	colour	p.n.
				weight/volume: - / -		
Copyright protected acc. DIN ISO 16016		Only valid as long as released in EDM (and together with its 3D CAD model, if applicable)!		scale: 1:1	date: 2015-MAR-12	
PEPPERL+FUCHS		Mechanical drawing TRUNK_MODUL		change notice	respons. -	CAD-2088 -
Mannheim				-	approved	
					norm	sheet 1 of 1