Note:
Dimensions are in inches [millimeters] and are for reference.

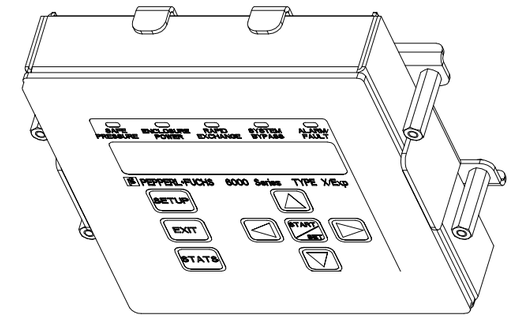

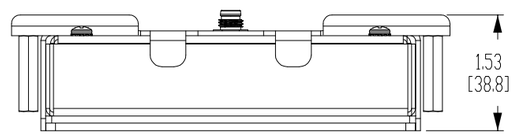

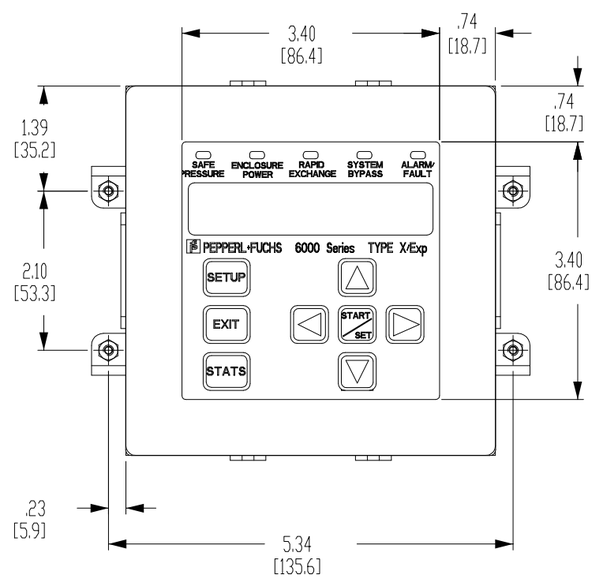

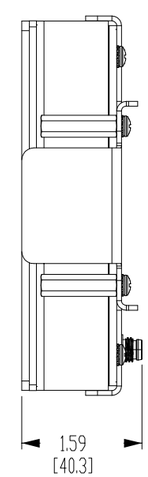

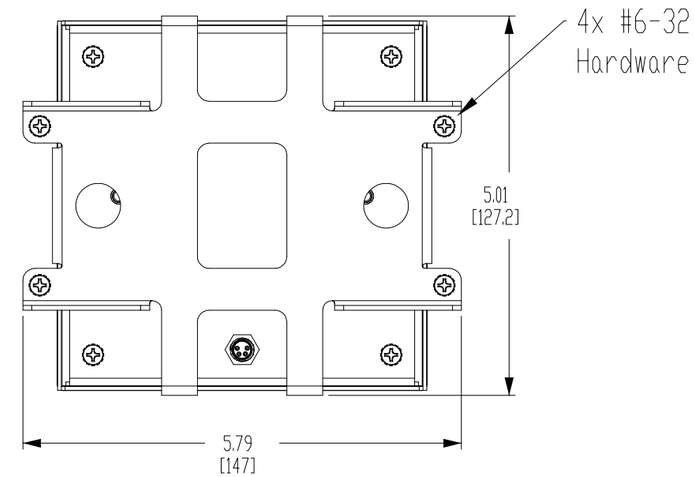

Confidential accoring to ISO 16016	Only valid as long as released in EDM or with a valid production documentation!			scale: 1:2	date: 29-Feb-16
PEPPERL+FUCHS	Mechanical drawing	change notice	respons.	US.DAP	CAD-B0E5
	xPurge 6000 Component Kit		approved	US.CPR	
Twinsburg			norm		sheet 1 of 4

Note:
Dimensions are in inches [millimeters] and are for reference.

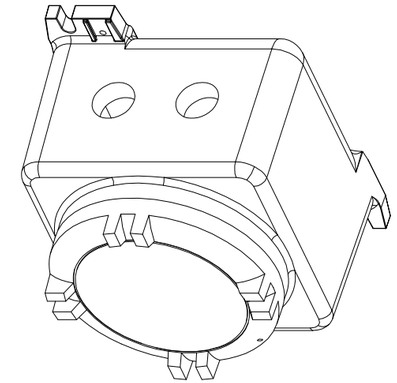

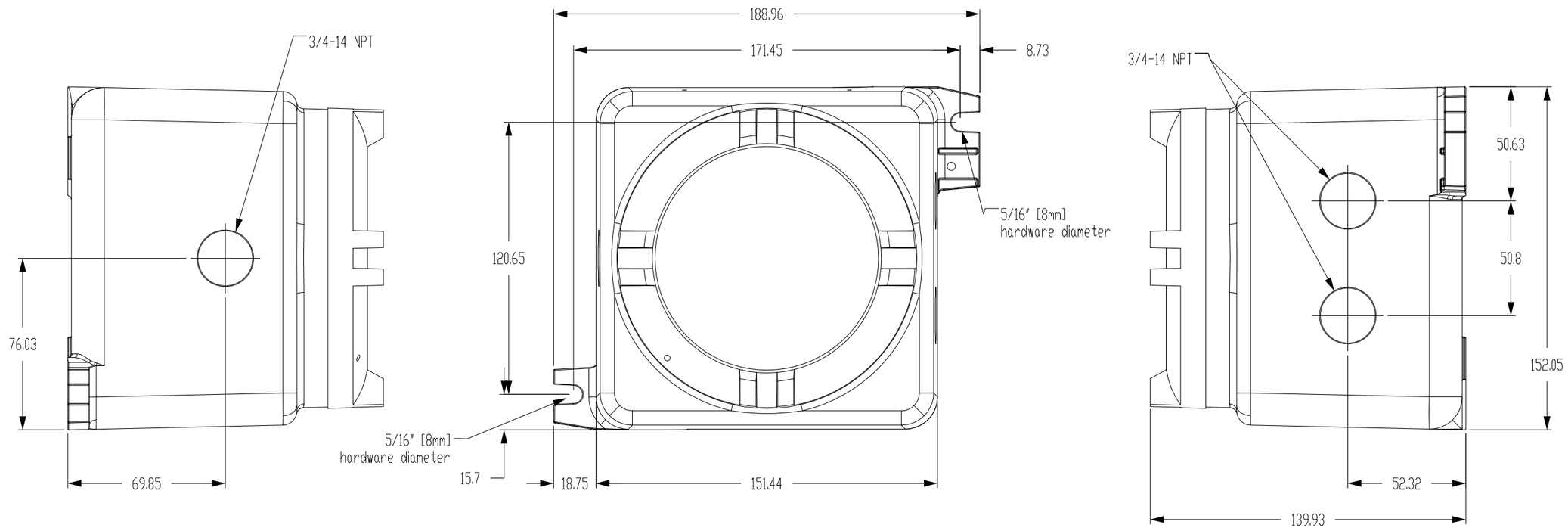

Confidential accoring to ISO 16016	Only valid as long as released in EDM or with a valid production documentation!			scale: 1:2	date: 29-Feb-16
PEPPERL+FUCHS	Mechanical drawing	change notice	respons.	US.DAP	CAD-B0E5
	xPurge 6000 Component Kit		approved	US.CPR	
Twinsburg			norm		sheet 2 of 4

Note:
Dimensions are in inches [millimeters] and are for reference.

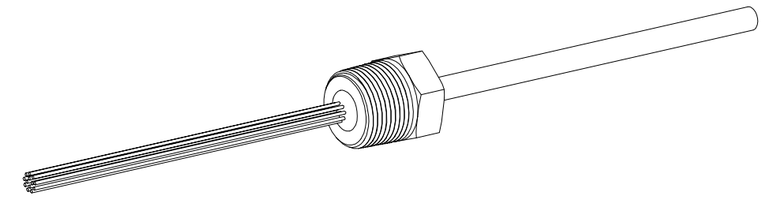

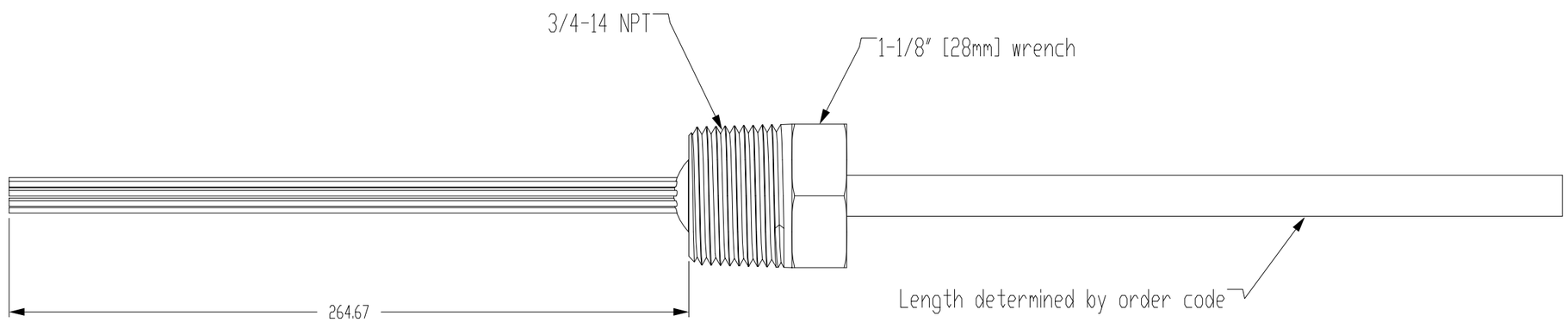

Confidential accoring to ISO 16016	Only valid as long as released in EDM or with a valid production documentation!			scale: 1:1	date: 29-Feb-16
PEPPERL+FUCHS	Mechanical drawing	change notice	respons.	US.DAP	CAD-B0E5
	xPurge 6000 Component Kit		approved	US.CPR	
Twinsburg			norm		sheet 3 of 4

Note:
All dimensions are in inches [millimeters] and are for reference.

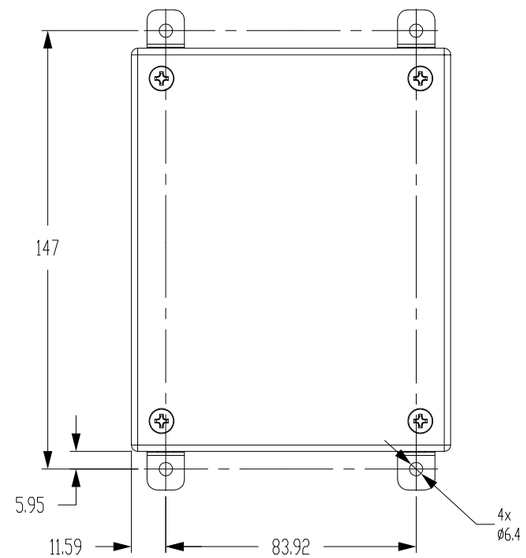

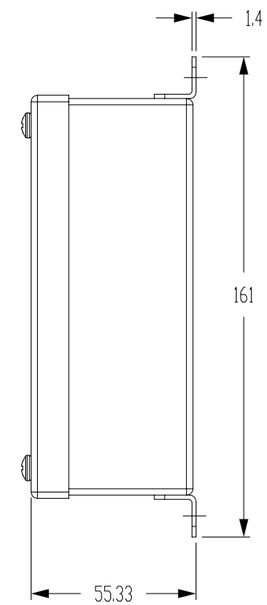

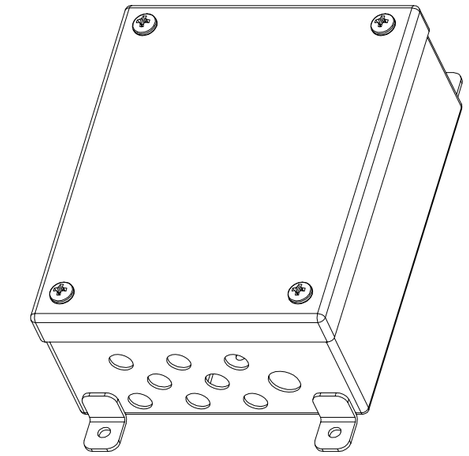

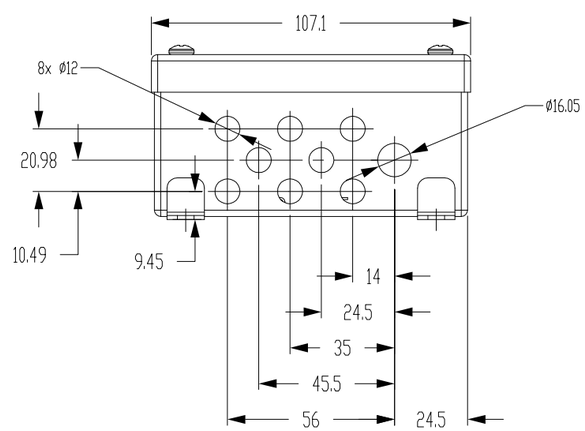

Confidential accoring to ISO 16016	Only valid as long as released in EDM or with a valid production documentation!			scale: 7:20	date: 29-Feb-16
PEPPERL+FUCHS	Mechanical drawing	change notice	respons.	US.DAP	CAD-B0E5
	xPurge 6000 Component Kit		approved	US.CPR	
Twinsburg			norm		sheet 4 of 4