Notes:
1) Dimensions are in millimeters
2) Maximum operating pressure differential: 120PSI (8.27 bar)
3) Media: Air/inert gas
4) Operating temperature: -40℃ to +70℃
5) Materials:
   Body: 6061-T651 Aluminum, clear anodized
   Fittings: 316 Stainless steel
   Seals: PTFE (Ball) and EPDM
   Flat gasket: Closed cell silicone

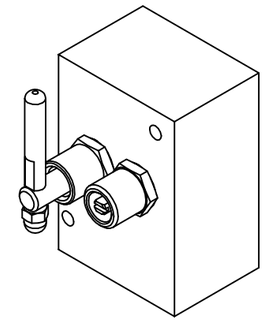

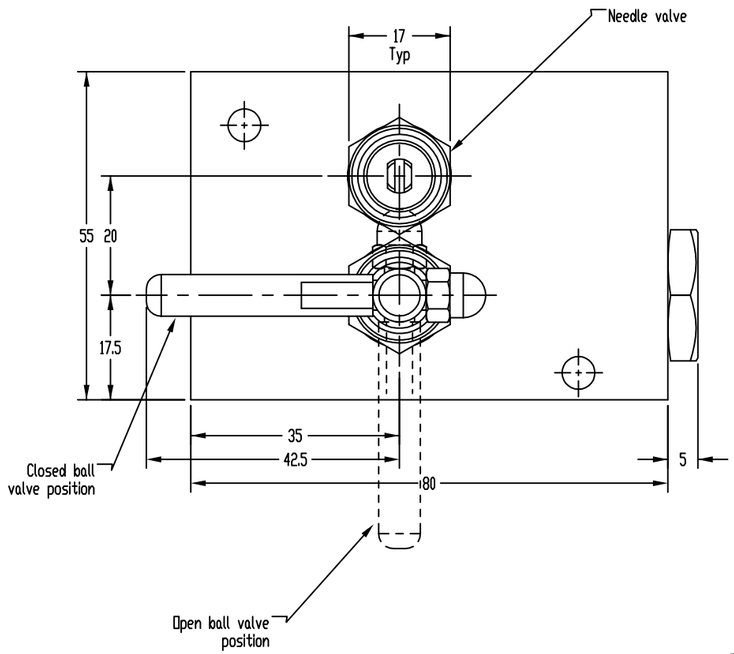

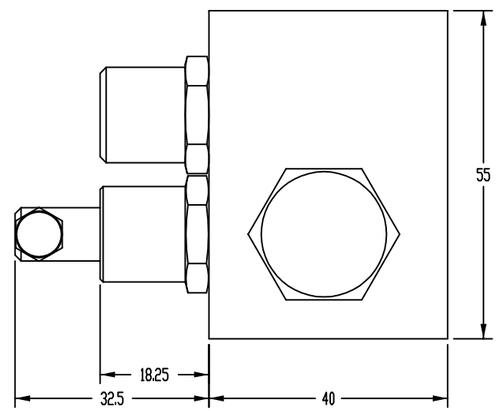

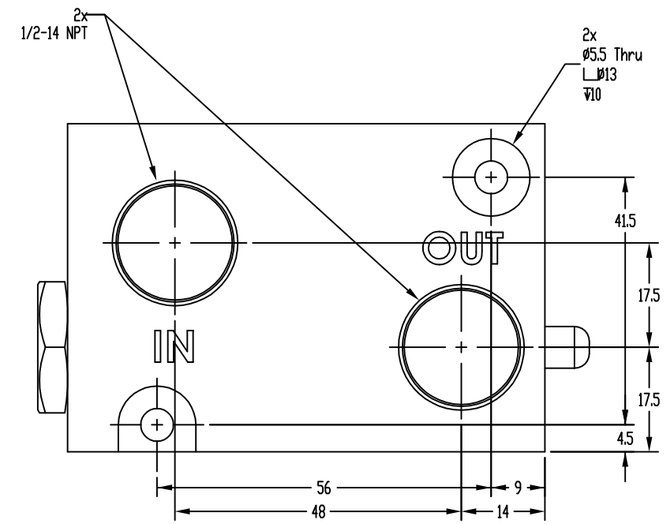

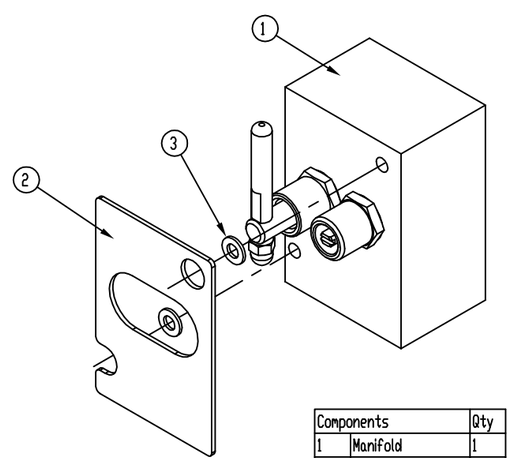

Components		Qty
1	Manifold	1
2	Seal gasket	1
3	Spacer washers	2

Rev	Resp.	Description

Confidential according to ISO 16016	Only valid as long as released in EDM or with a valid production documentation!		scale: 1:1	date: 2018-May-30
PEPPERL+FUCHS	Mechanical drawing 7500-MAN-MV-01	change notice	respons. US.DAP	CAD-B0F7
			approved	
Twinsburg			norm	sheet 1 of 1