Notes:
1) All dimensions are in millimeters.

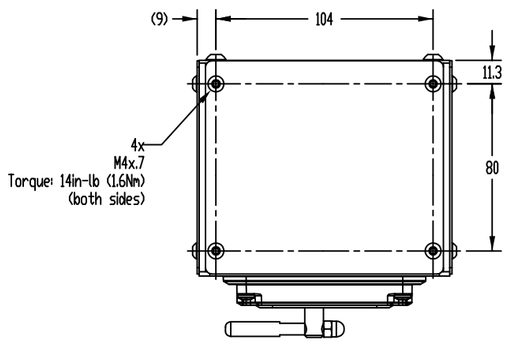

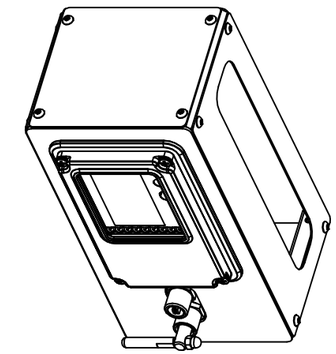

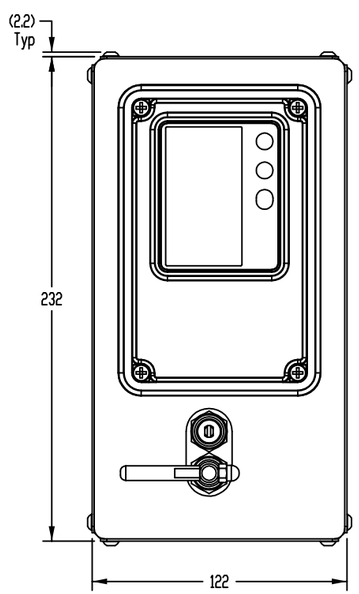

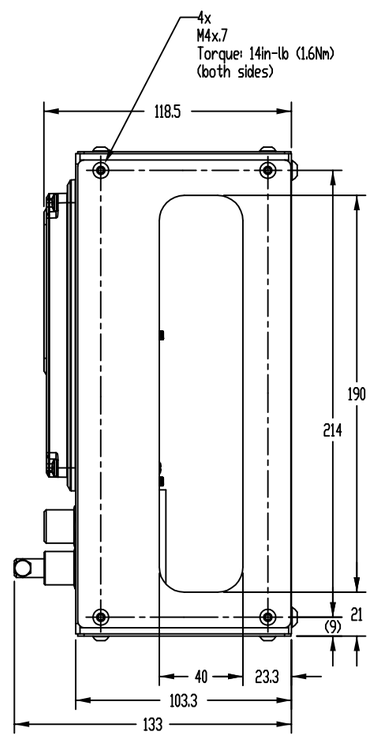

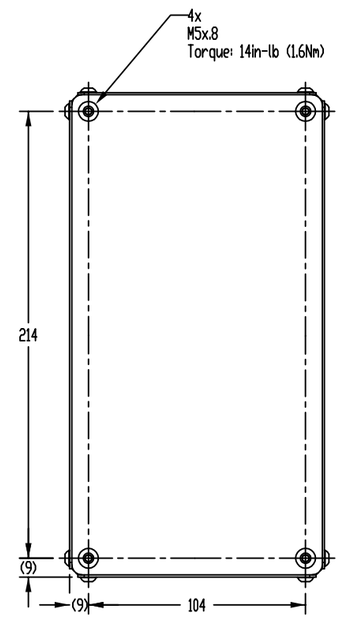

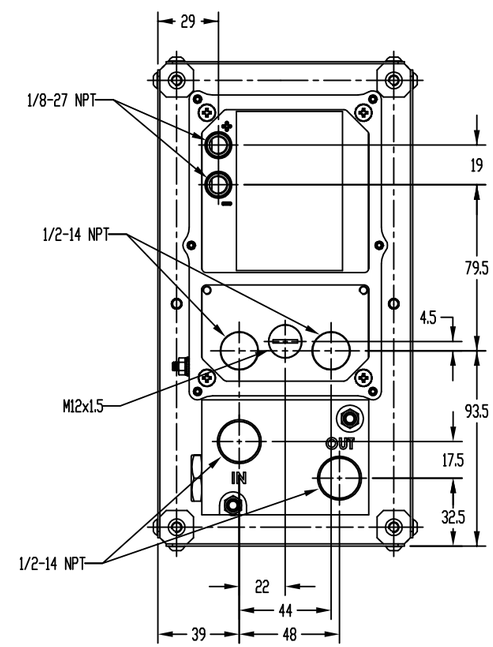

Rev	Resp.	Description

Confidential according to ISO 16016	Only valid as long as released in EDM or with a valid production documentation!		scale: 7:2	date: 2018-Jun-06	
PEPPERL+FUCHS	Mechanical drawing	change notice	respons.	US.DAP	CAD-B0G1
	7500-MTD-BXRW-01		approved		
Twinsburg			norm		sheet 1 of 1