Notes:
1) Dimensions are in millimeters

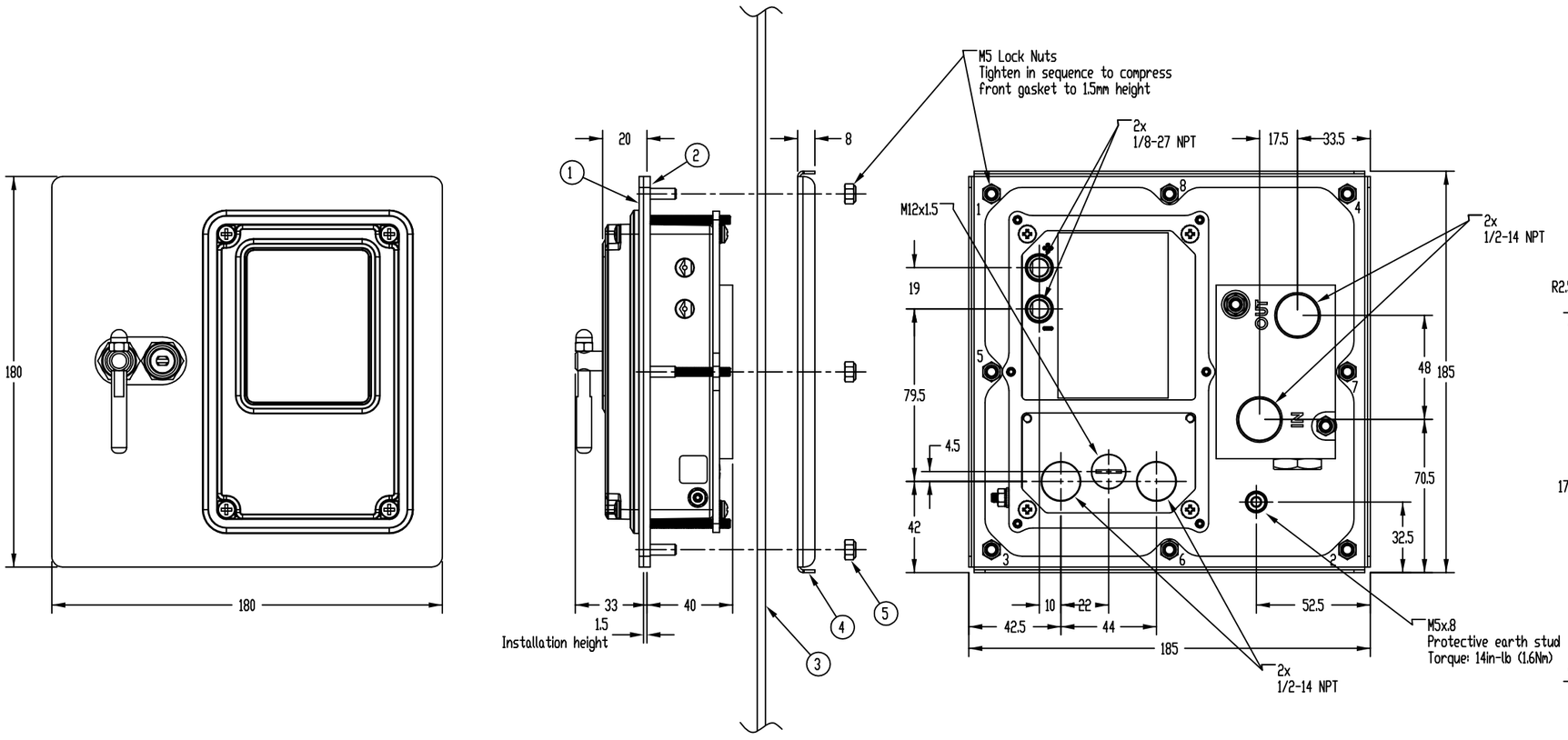

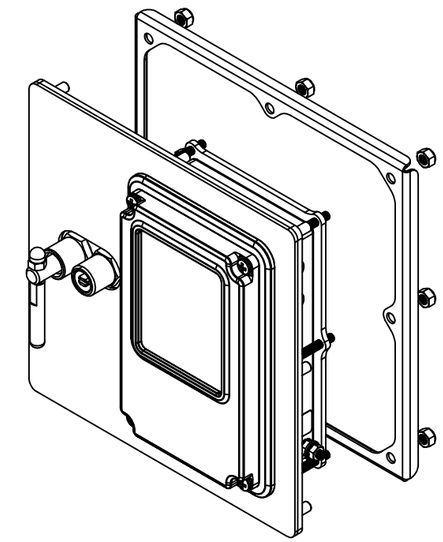

Panel cutout dimensions

Rev	Resp.	Description

Components	
1	Control panel
2	Panel seal
3	Panel
4	Mounting bracket
5	M5 lock nuts

Confidential according to ISO 16016	Only valid as long as released in EDM or with a valid production documentation!		scale: 2:5	date: 2018-Jun-12	
PEPPERL+FUCHS	Mechanical drawing	change notice	respons.	US.DAP	CAD-B0G7
	7500-MTD-PMSW-01		approved		
Twinsburg			norm		sheet 1 of 1