PROCESS AUTOMATION

MANUAL

PSCAN-M
WIRELESS HANDHELD BARCODE READER,

PSCAN-B,
BASE STATION,

PSCAN-C
CHARGER

PEPPERL+FUCHS
PROTECTING YOUR PROCESS

1 Safety

1.1 Validity

The chapter “Safety” is valid as instruction manual.

Specific processes and instructions in this document require special precautions to guarantee the safety of the operating personnel.

1.2 General safety instructions

The plant owner is responsible for its planning, installation, commissioning, operation, maintenance and disassembly.

Installation and commissioning of all devices must be performed by a trained professional only.

Protection of operating personnel and the system is not ensured if the product is not used in accordance with its intended purpose.

Laws and regulations applicable to the usage or the intended purpose must be observed. The devices are only approved for appropriate and intended use. Ignoring these instructions will void any warranty and absolve the manufacturer from any liability.

The Declaration of Conformity, Certificate of Compliance, Statement of Conformity, EC-type-examination certificate and data sheets are an integral part of this document.

The data sheet contains the electrical data of the Declaration of Conformity, the Certificate of Compliance and the EC-type-examination certificate.

The documents mentioned are available from http://www.pepperl-fuchs.com or contact your local Pepperl+Fuchs representative.

1.3 Used Symbols

Safety-relevant Symbols

Danger!
This symbol indicates a warning about an immediate possible danger.

In case of ignoring the consequences may range from personal injury to death.

Warning!
This symbol indicates a warning about a possible fault or danger.

In case of ignoring the consequences may cause personal injury or heaviest property damage.

Caution!
This symbol indicates a warning about a possible fault.

In case of ignoring the devices and any connected facilities or systems may be interrupted or fail completely.

Informative Symbols

Note!
This symbol brings important information to your attention.

Action

This symbol indicates a paragraph with instructions.

227735 2013-01

1.4 Delivery, Transport and Storage

Check the packaging and contents for damage.

Check if you have received every item and if the items received are the ones you ordered.

Keep the original packaging. Always store and transport the device in the original packaging.

Always store the device in a clean and dry environment. The permitted storage temperature (see data sheet) must be considered.

1.5 Intended use wireless barcode system

The devices are only approved for appropriate and intended use. Ignoring these instructions will void any warranty and absolve the manufacturer from any liability.

Intended use Wireless Barcode reader PSCAN-M-*

The EX handheld barcode reader PSCAN-M-* can be used in hazardous areas zone 1 + zone 21 according to the directive 94/9/EC (ATEX). The handheld barcode reader is able to read all standard 1D code families in industrial area. After a successful read a beep to indicate a good read is send out for easy working. In addition a bidirectional communication is possible. The communication of the handheld barcode reader with the base station PSCAN-B is wireless. Supply is made by an integral rechargeable battery (NiMH), which can be charged in the non-EX area. (PSCAN-C)

Intended use base station PSCAN-B-*

The PSCAN-B-* base station can be used in hazardous area zone 1 + zone 21 according to the directive 94/9/EC (ATEX). The base station is used for wireless communication with the handheld barcode reader PSCAN-M-* . Supply and the communication to a peripheral unit is made by a built-in, intrinsically safe interface.

1.6 Installation and Commissioning

The installation instructions in accordance with IEC/EN 60079-14 must be observed.

If devices have already been operated in general electrical systems, they may subsequently no longer be installed in electrical systems used in combination with hazardous areas.

The respective peak values of the field device and the associated apparatus with regard to explosion protection should be considered when connecting intrinsically safe field devices with intrinsically safe circuits of associated apparatus (verification of intrinsic safety). Make sure to observe IEC/EN 60079-14 and IEC/EN 60079-25.

1.7 Technical data wireless barcode system

PSCAN-M

Data for application in connection with Ex-areas	
Operating temperature	-10 °C ... +40 °C
Maximum Safe voltage (charge contacts) Um	8 V

PSCAN-B

Data for application in connection with Ex-areas	
Operating temperature	-10 °C ... +50 °C
Power Pi	1,5 W
Voltage Ui	9 V
Current Ii	400 mA
Internal inductance Li	10 µH
Internal capacitance Ci	negligible

PSCAN-C

Maximum safe output voltage	
Output voltage Um	8 V

1.8 Identification Wireless Barcode System

PSCAN-M

PSCAN-M
Pepperl+Fuchs GmbH
68307 Mannheim, Germany
BVS 10 ATEX E 146
Ex II 2G Ex ib [op is] IIB T4 Gb
Ex II 2D Ex ib [op is] IIIB T135°C Db
-10°C≤ Ta ≤ +40°C

PSCAN-B

PSCAN-B
Pepperl+Fuchs GmbH
68307 Mannheim, Germany
BVS 10 ATEX E 146
Ex II 2G Ex ib IIB T4 Gb
Ex II 2D Ex ib IIIB T135°C Db
-10°C≤ Ta ≤ +50°C

1.9 Laser safety compliance

The handheld barcode reader conforms to the following applicable requirements at the date of manufacture.

- EN 60825-1
- CDRH 21 CFR 1040

The laser light is visible to the human eye and is emitted from the output window.

Warning!
Laser Light

The human eye can be damaged.

Do not stare into beam of the laser light.
Any changes at the device are forbidden these could cause a dangerous laser light.
Please consider the procedures described in this operating instruction.
Avoid that the laser beam hits reflective surfaces such as mirrors, etc..

A warning label is attached to the handheld barcode reader describing the laser and laser category. The device is a class 2 laser.
It is not necessary to open the handheld barcode reader for installation, application or maintenance.

227735 2013-01

Labels cannot be attached to a laser diode. Hence the respective values are listed below:

Laser Class 2M
EN 60825-1

Laser diode

Maximum output	0.9 mW
Wavelength according to class 2 EN 60825-1 and CDRH 21CFR 1040	630 - 680 nm

1.10 Repair and Maintenance

The devices must not be repaired, changed or manipulated. If there is a defect, the product must always be replaced with an original device.

1.11 Applied standards and guidelines

Directive conformity	
Electromagnetic compatibility	
R&TTE-Directive 1999/5/EC	ETSI EN 301489-1-V1.8.1:2008
Explosion protection	
Directive 94/9 EC	IEC 60079-0:2011 , EN 60079-11:2012

2 Product Specifications

2.1 Components of the wireless barcode system

PSCAN-M, Wireless handheld barcode reader

Figure 2.1 PSCAN-M

PSCAN-B, Base station

Figure 2.2 PSCAN-B

Figure 2.3 PSCAN-B with male receptacle 5-pin

In scope of supply additional enclosed: M12 field attachable connector
The M12 field attachable connector serves to connect an own cable.

- Core cross section: 0,5 mm^2
- Cable diameter: 5 - 8 mm

Figure 2.4 M12 field attachable connector

PSCAN-C, Charger

Figure 2.5 PSCAN-C

227735 2013-01

2.2 Radio barcode reader PSCAN-M-* Function

The EX handheld barcode reader PSCAN-M-* can be used in hazardous areas zone 1 + zone 21 according to the directive 94/9/EC (ATEX). The handheld barcode reader is able to read all standard 1D code families in industrial area. After a successful read a beep to indicate a good read is send out for easy working. In addition a bidirectional communication is possible. The communication of the handheld barcode reader with the base station PSCAN-B is wireless. Supply is made by an integral rechargeable battery (NiMH), which can be charged in the non-EX area. (PSCAN-C)

Further functions:

- **Aiming system**
  First of all a partial trigger produces a red spot for easy aiming. by completely pressing the trigger the scan line appears to start code scanning.
- **3 GL-Technics (3 green lights)**
  The good read is shown via an audio signal, green LEDs on upside and underside plus a green scan line direct on the barcode.

Using PSCAN-M-* readers
The PSCAN-M barcode reader scans barcodes up to a certain distance. Simply aim and pull trigger. Code scanning is performed along the scan line emitted from the reading window. The line must cross the entire code. The best angles are indicated in the figure below.

Code reading example

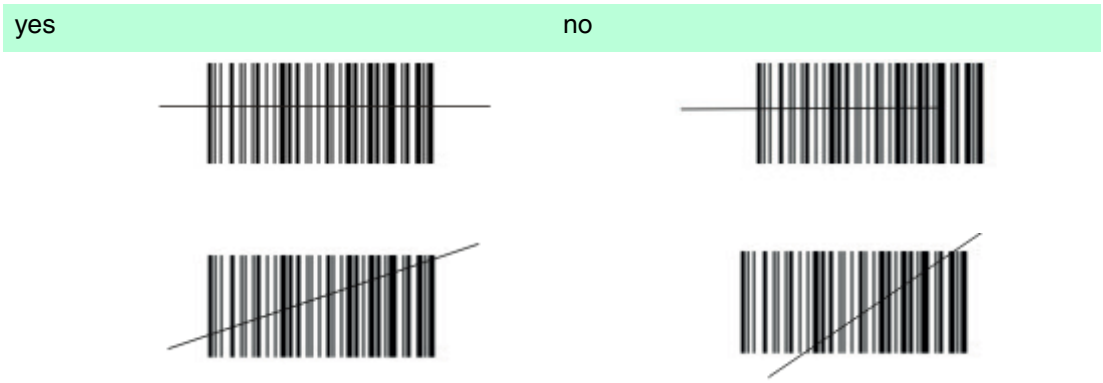

Best reading angles

Note!

To get a good reading performance do not hold the barcode reader vertically, use the reading angles in the figure below.

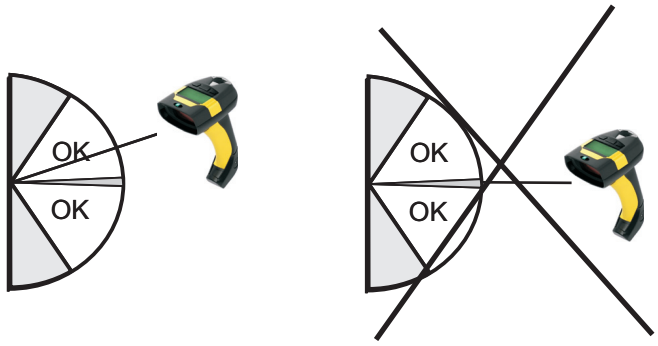

Note!

Trigger

If the handheld barcode reader PSCAN-M will not turn on after pressing the trigger the PSCAN-M will be loaded in the charger PSCAN-C.

Note!

Charging the wireless handheld barcode reader PSCAN-M

To charge the battery of the handheld barcode reader PSCAN-M you must use the base station PSCAN-C exclusively.

2.3 Base station PSCAN-B-* Function

The PSCAN-B-* base station can be used in hazardous area zone 1 + zone 21 according to the directive 94/9/EC (ATEX). The base station is used for wireless communication with the handheld barcode reader PSCAN-M-* . Supply and the communication to a peripheral unit is made by a built-in, intrinsically safe interface.

The wireless handheld barcode reader PSCAN-M in combination with PSCAN-B-* can be used as standalone-system as well as in combination with VisuNet operator stations or TERMEX operator terminals in hazardous areas.

Note!

False configuration

The base station PSCAN-B is a special form of the radio/base station BC-80X0 of the company Datalogic. **Please use for configuration of the base station PSCAN-B exclusive the Pepperl+Fuchs manual.** Using the manual from Datalogic can lead to incorrect configuration: By multiple wrong configuration, (via Datatlogic manual) for example change to interface USB, loosing the entered number of the base staion, the PSCAN-B can be placed in a state which can not be undone locally.
In this case the base station PSCAN-B can be set to the right configuration only by returning to the company Pepperl+Fuchs and a paid repair.

2.4 Charger PSCAN-C-* Function

Note!

Do not use the original Datalogic charger

Charging the handheld barcode reader PSCAN-M with the Datalogic charger is not possible.

2.5 Technical data wireless barcode reader system

2.5.1 Technical data wireless handheld barcode reader PSCAN-M

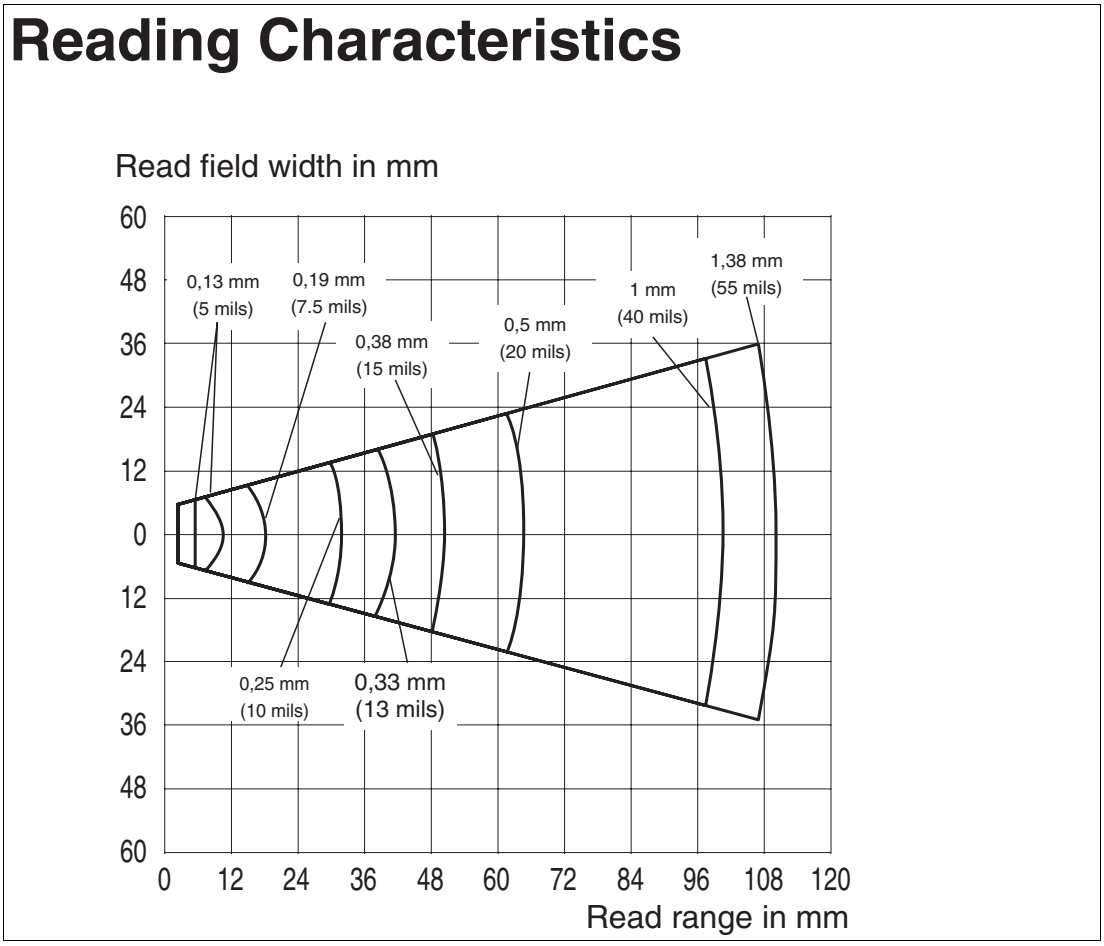

Figure 2.6 Reading characteristics PSCAN

Dimensions

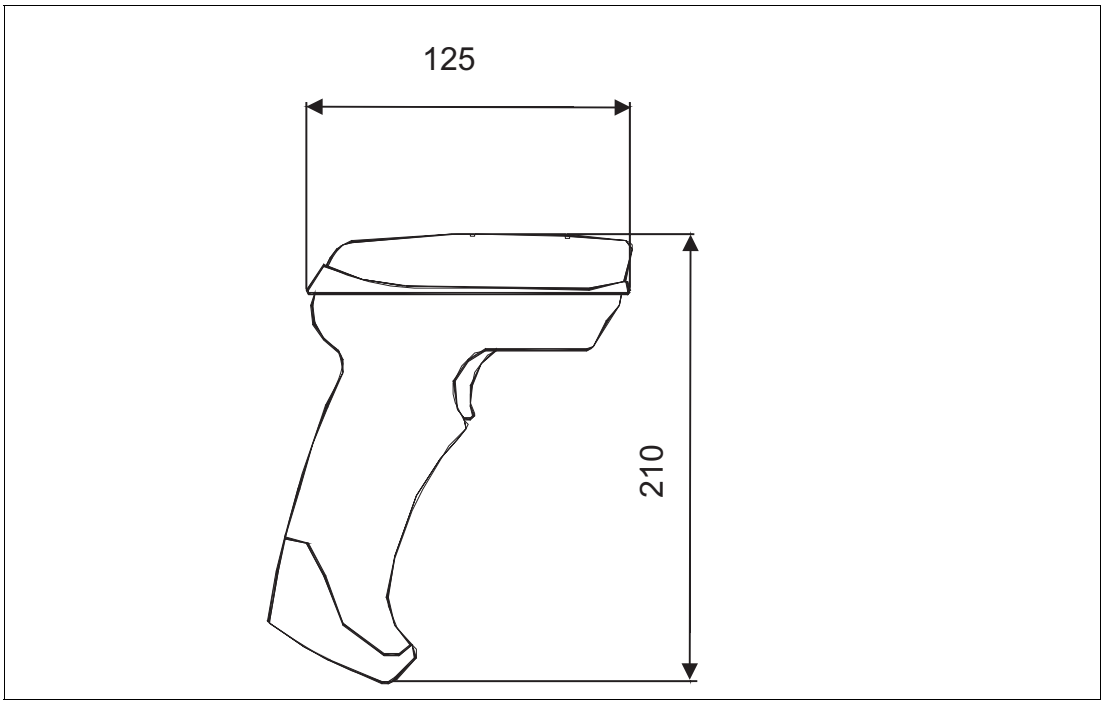

Figure 2.7 Dimensions PSCAN-M

Wireless handheld barcode reader PSCAN-M	
General specifications	
Radio distance (in open air)	max. 50 m
Light type	laser diode 630 ... 680 nm
Readable codes	2/5 Family, Code 39, (plus Code 32, Clip 39), EAN/UPC, EAN 128, Code 128, Code 93, CODABAR, Code 49, Code MSI, Code 11, Code 16K, ISBN/ISSN, ISBT 128, GS1DataBar™ (once RSS)
Laser class	Class 2 - EN 60825-1, CDRH
Scan rate	30 ... 40 s^{-1}
Beam deviation angle	max. 42 °
Read distance	60 ... 1100 mm
Resolution	0.076 mm (3 mils)
Operating duration	approx. 20000 reads / recharge
Electrical specifications	
Battery type	NiMH battery
Charging time	max. 3 h
Directive conformity	
Electromagnetic compatibility	
R&TTE-Dirctive 1999/5/EC	ETSI EN 301489-1-V1.8.1:2008
Explosion protection	
Directive 94/9/EC	IEC 60079-0:2011 , EN 60079-11:2012
Ambient conditions	

227735 2013-01

Wireless handheld barcode reader PSCAN-M	
Operating temperature	-10 ... 40 °C (14 ... 104 °F)
Storage temperature	-10 ... 40 °C (14 ... 104 °F)
Relative humidity	90 % , noncondensing
Mechanical specifications	
Protection degree	IP44
Mass	460 g
Dimensions	125 mm x 70 mm x 210 mm
Data for application in connection with Ex-areas	
EC-Type Examination Certificate	BVS 10 ATEX E 146
Group, category, type of protection	II 2G Ex ib [op is] IIB T4 Gb II 2D Ex ib [op is] IIIB T135°C Db
Maximum safe voltage (charge contacts) U_m	8 V

2.5.2 Technical data base station PSCAN-B

Dimensions

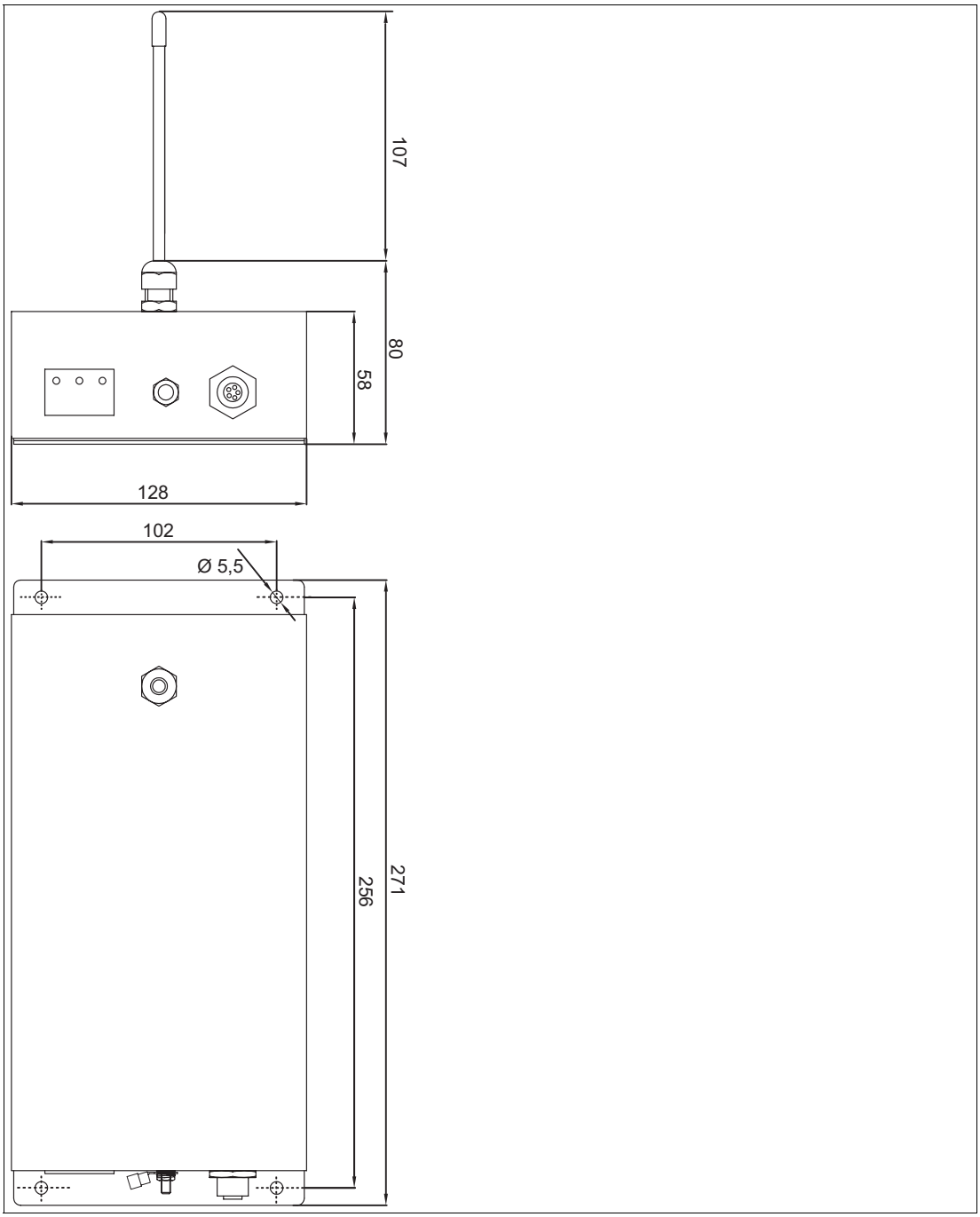

Figure 2.8 Dimensions PSCAN-B

Base station PSCAN-B	
General specifications	
Radio distance	max. 50 m
Electrical specifications	
Operating voltage	8 ... 9 V
Current consumption	100 mA

227735 2013-01

Base station PSCAN-B	
Directive conformity	
Electromagnetic compatibility	
R&TTE-Directive 1999/5/EC	ETSI EN 301489-1-V1.8.1:2008
Explosion protection	
Directive 94/9/EC	IEC 60079-0:2011 , EN 60079-11:2012
Ambient conditions	
Operating temperature	-10 ... 50 °C (14 ... 122 °F)
Storage temperature	-20 ... 60 °C (-4 ... 140 °F)
Relative humidity	90 % , noncondensing
Mechanical specifications	
Protection degree	IP54
Mass	340 g
Dimensions	271 mm x 128 mm x 80 mm
Height antenna	107 mm
Data for application in connection with Ex-areas	
EC-Type Examination Certificate	BVS 10 ATEX E 146
Group, category, type of protection	Ex II 2G Ex ib IIB T4 Gb Ex II 2D Ex ib IIIB T135°C Db
Voltage U_i	9 V
Current I_i	400 mA
Power P_i	1.5 W
Internal capacitance C_i	10 µF
Internal inductance L_i	negligible

2.5.3 Technical data charger PSCAN-C

Charger PSCAN-C	
Electrical specifications	
Operating voltage	12 V (± 10 %)
Directive conformity	
Electromagnetic compatibility	
R&TTE-Directive 1999/5/EC	ETSI EN 301489-1-V1.8.1:2008
Low voltage	
Directive 2006/95/EC	EN 60950
Ambient conditions	
Operating temperature	0 ... 40 °C (32 ... 104 °F)
Storage temperature	-10 ... 60 °C (14 ... 140 °F)
Relative humidity	90 % , noncondensing
Mechanical specifications	
Protection degree	IP20

Charger PSCAN-C	
Mass	330 g
Dimensions	235 mm x 108 mm x 81 mm

2.6 Accessory wireless barcode system

2.6.1 Holder for handheld barcode reader

Dimensions

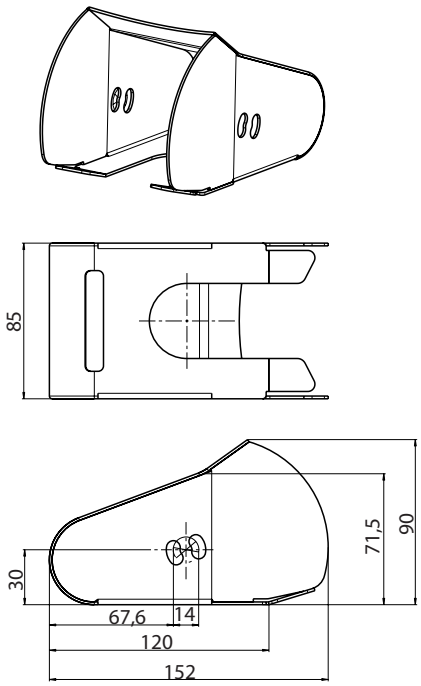

2.6.2 Connecting cable DATL-A4-0,5-3

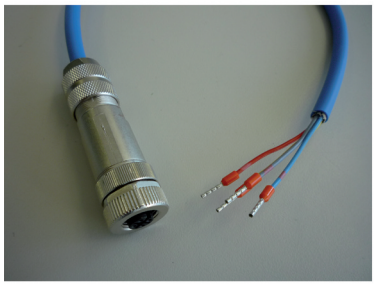

Figure 2.9 Connnecting cable DATL-A4-0,5-3

Accessory	Order designation	Order number
Connecting cable (ENT-DC --- PSCAN-B) (TERMEX --- PSCAN-B) (VisuNet Ex1 --- PSCAN-B) (core cable ends --- cable socket M12, 5-pin)	DATL-A4-0,5-3	230262

Pin assignment base station PSCAN-B

PSCAN-B male receptacle M12 assignment	Core colour	Signal
2	grey	Rx
3	yellow	Tx
4	red	US
1	blue	GND
5		n.c.

3 Installation

3.1 Preparation

Unpacking the unit

1. Check that all package contents are present and undamaged.

   If anything is damaged, inform the shipper and contact the supplier.
2. Check that all items are present and correct based on your order and the shipping documents.

   If you have any questions, please contact Pepperl+Fuchs.
3. Keep the original packing material in case you need to store or ship the unit at a later time.

3.2 Examples for systems

3.2.1 Stand-alone Examples

PSCAN-B (EX area) via ENT-DC

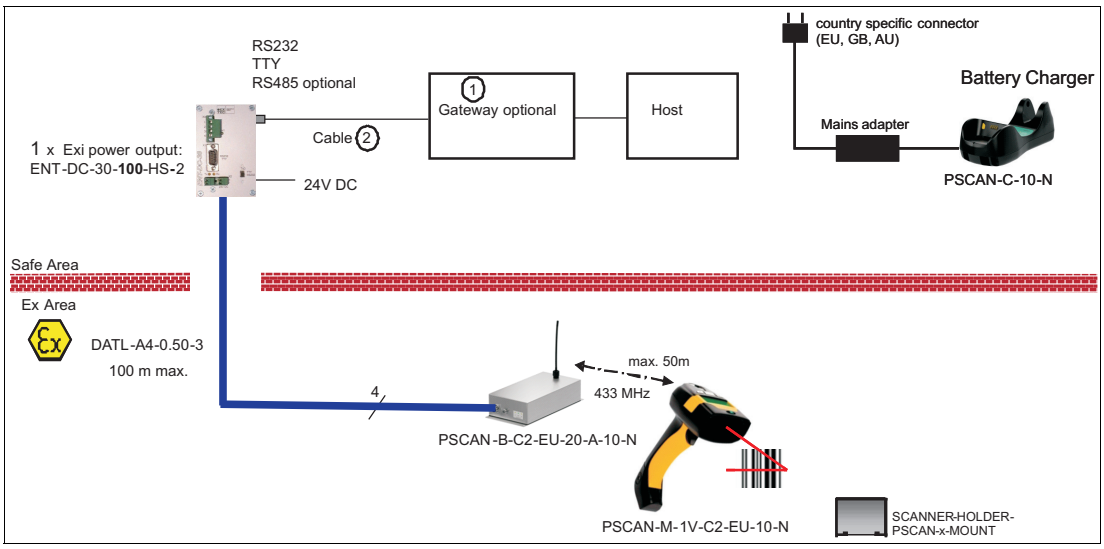

Figure 3.1 Example for Wireless Barcode System "Stand-alone" in Ex area

Other accessory	Order designation	Order number
Gateway 1	**Gateway 1**	
Profibus-DP Gateway inclusive MPI and PPI protocol	SK-PROFIBUS-DP-SPI3-HS	520898
Modbus / RTU Gateway	SK-PW-10-MODBUS-19K	520899
Cable 2	**Cable 2**	
RS232 connecting cable (for Modbus Gateway and standard PC)	S-ENT/PC-9	520645
RS232 connecting cable (for Profibus Gateway)	S-ENT/SPI3	520649

3.2.2 Wireless barcode system via VisuNet EX1 Operator Station

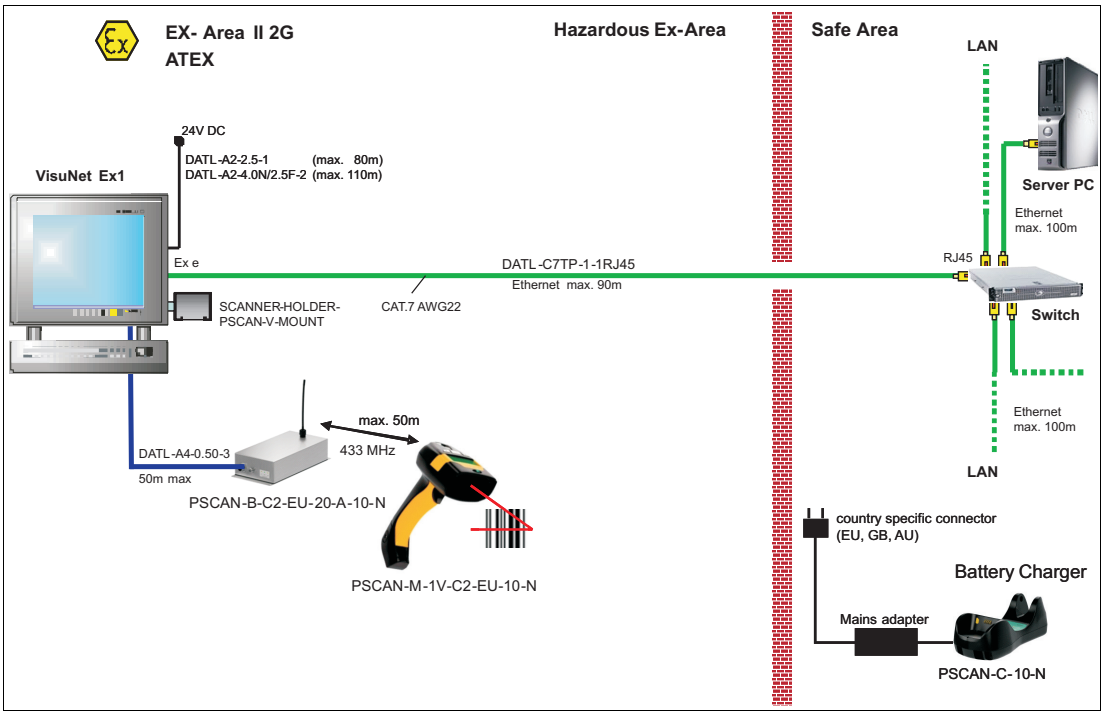

Figure 3.2 Example for wireless barcode system via VisuNet Ex1 Operator station

3.2.3 Barcode system via TERMEX Operator Panels

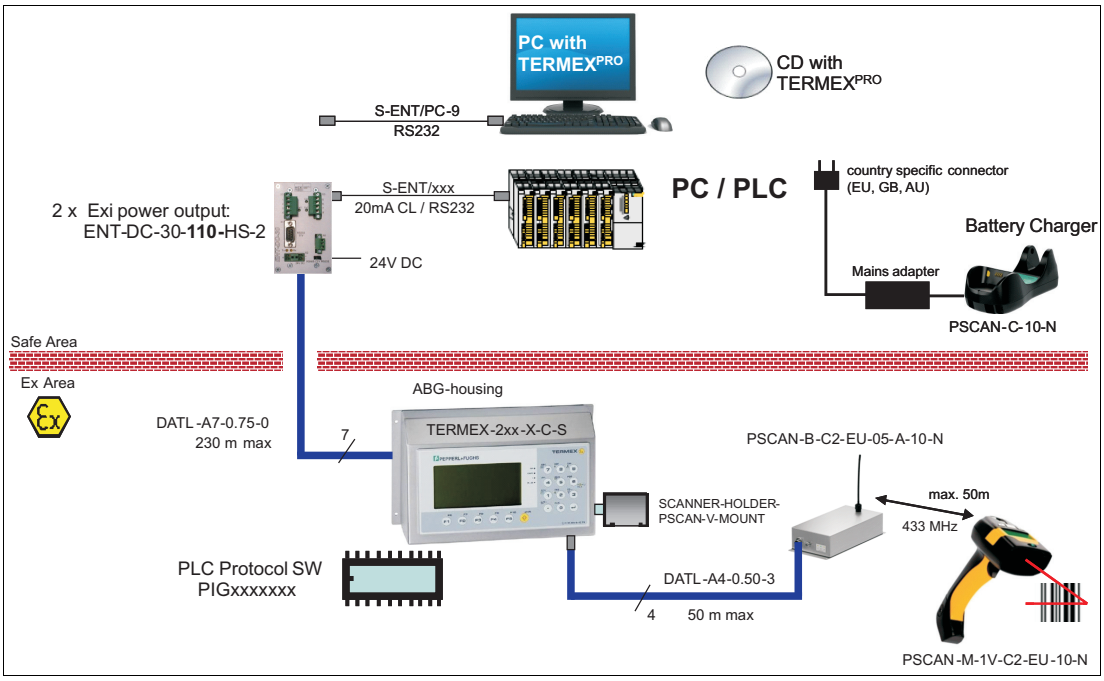

Figure 3.3 Example for wireless barcode system via TERMEX Operator Panel

3.2.4 Barcode system via VisuNet GMP, all devices are in the NON Ex area

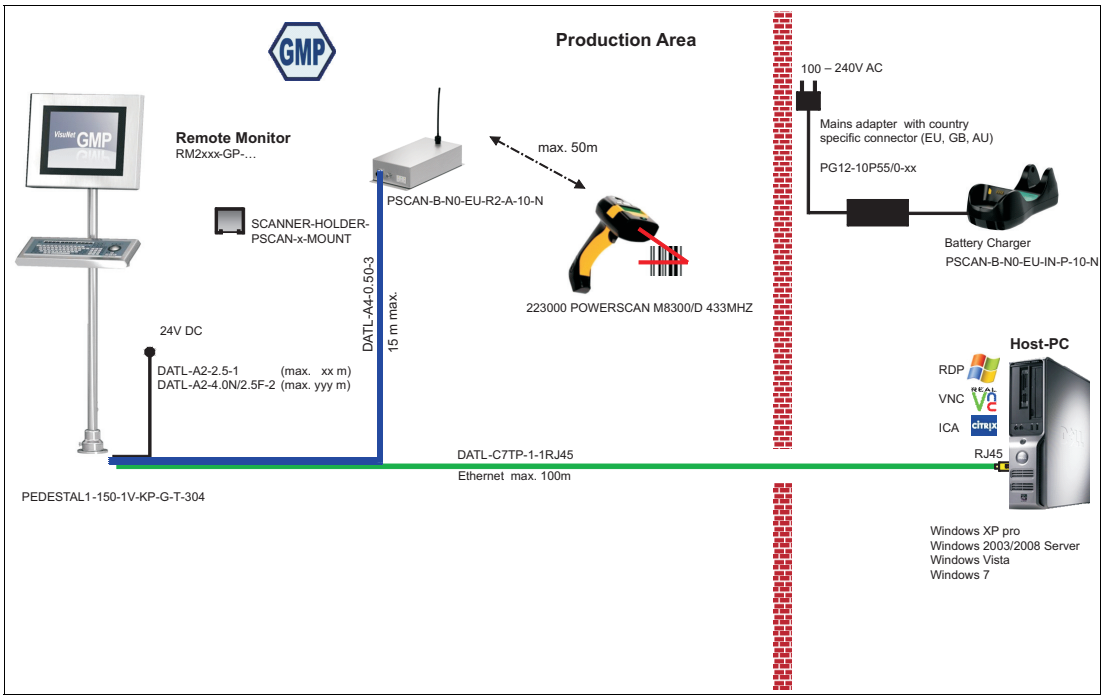

Figure 3.4 Example for VisuNet GMP via barcode system in the NON Ex area

3.2.5 Barcode system in the NON Ex area, PSCAN-B in stainless steel housing, example stand alone

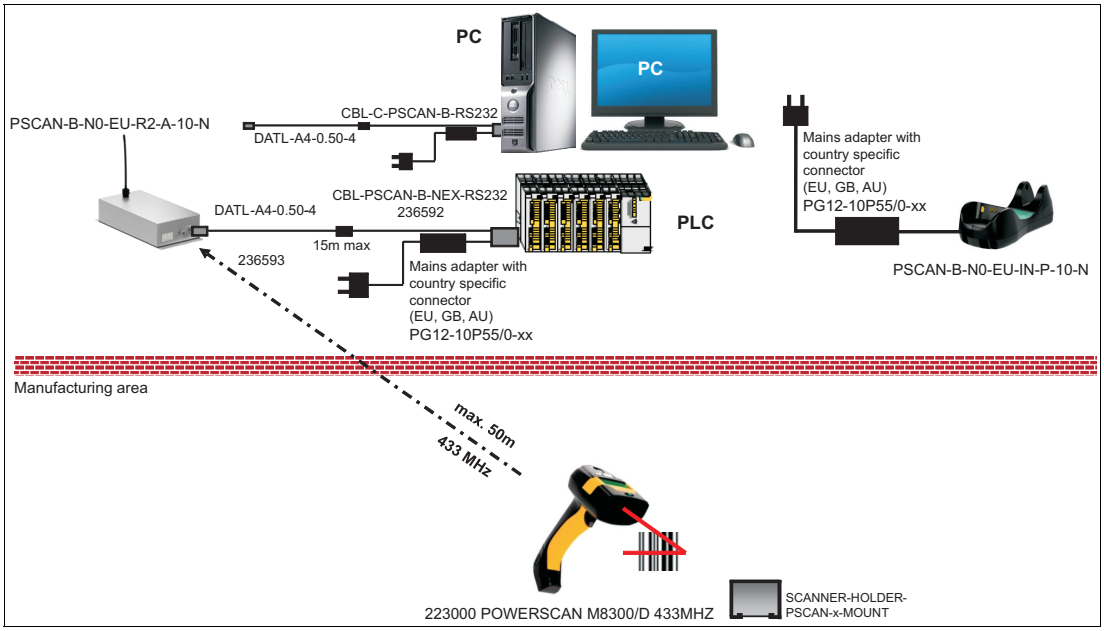

Figure 3.5 Example barcode system stand alone in the NON Ex area, PSCAN-B in stainless steel housing

3.2.6 Barcode system PSCAN-B in plastic housing in the NON Ex area (Datalogic), PSCAN-M in Ex area

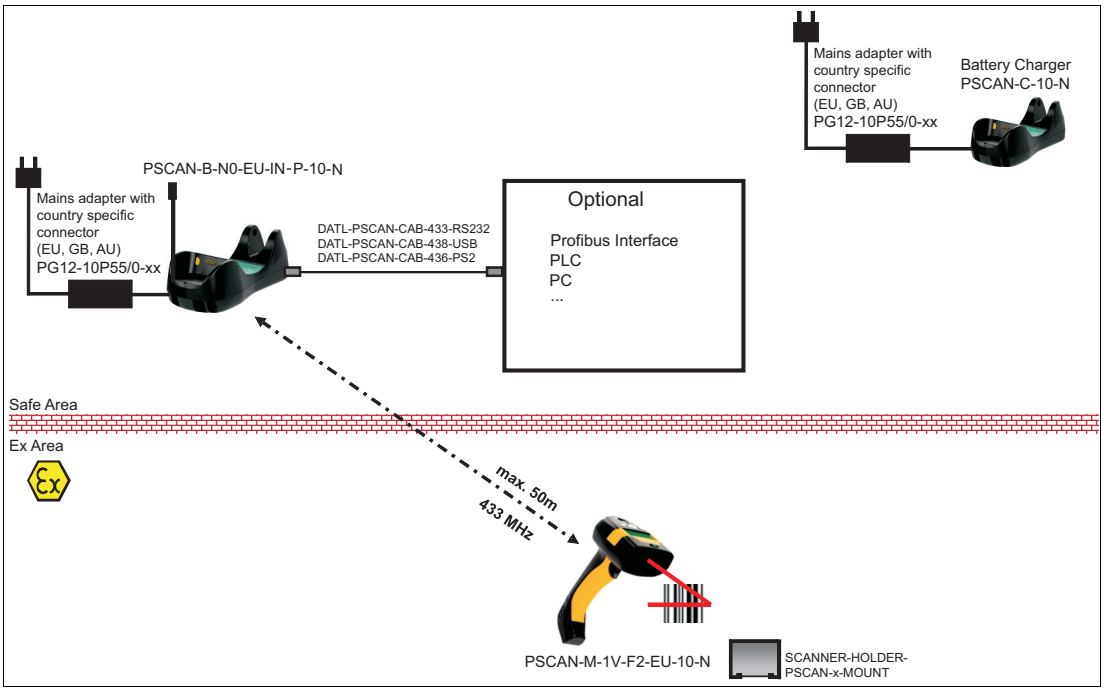

Figure 3.6 Example barcode system PSCAN-M in the Ex area, PSCAN-B in plastic housing in NON Ex area

3.3 Mechanical installation

3.3.1 Hole pattern for base station PSCAN-B

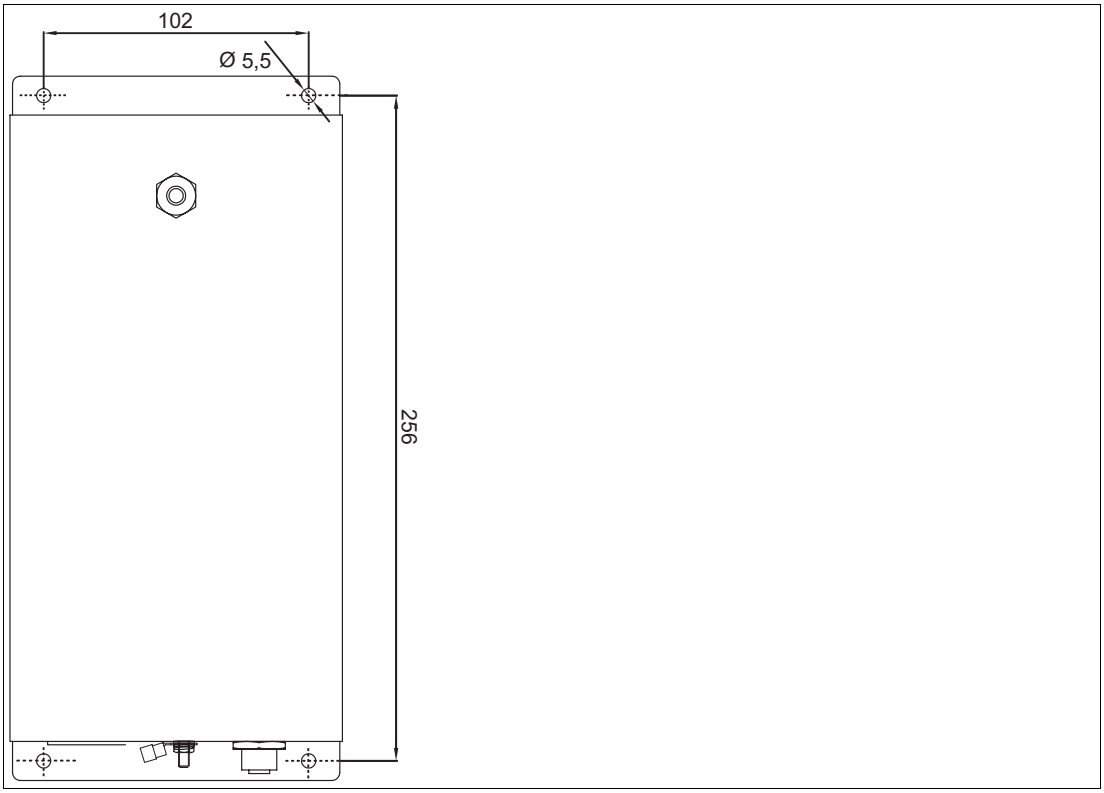

Figure 3.7 PSCAN-B hole pattern

3.4 Electrical installation wireless barcode system

Note!

Trigger

If the handheld barcode reader PSCAN-M will not turn on after pressing the trigger the PSCAN-M will be loaded in the charger PSCAN-C.

Note!

Charging the wireless handheld barcode reader PSCAN-M

To charge the battery of the handheld barcode reader PSCAN-M you must use the base station PSCAN-C exclusively.

Note!

Do not use the original Datalogic charger

Charging the handheld barcode reader PSCAN-M with the Datalogic charger is not possible.

3.4.1 Installation M12 field attachable connector

(This M12 field attachable connector is in the scope of supply of the base station PSCAN-B)

Figure 3.8 M12 field attachable connector

Note!

Max. outside diameter of the cable

Please use for connecting the M12 field attachable connector a cable with a maximum outside diameter of 8 mm.

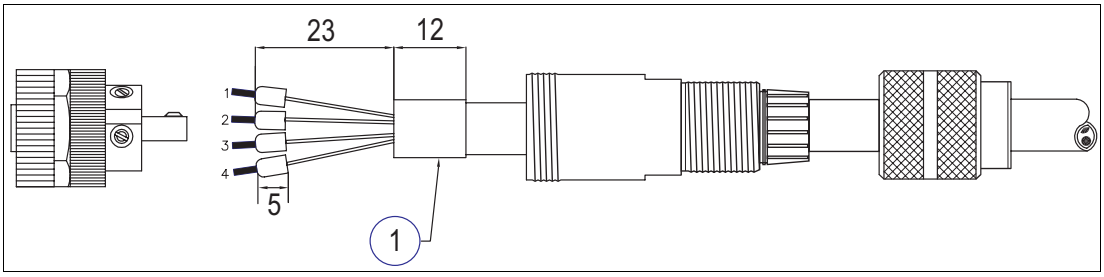

Figure 3.9 Installation M12 field attachable connector

1 Shield

Pin assignment M12 field attachable connector

Cable / pin	Signal
1	GND
2	Rx
3	Tx
4	US
5	n.c.

Installation M12 field attachable connector

1. Pull the socket parts onto the cabel (as shown in the drawing).
2. Dismantle the cable 23 mm.
3. Turn down the cable shield and shorten it to 12 mm.
4. Wrap the cable shield additional with copper tape (not included in scope of supply).
5. Strip the cable 5 mm and fix the wire end sleeves (not encluded in scope of supply).
6. Tighten the core cable ends on the cable socket (as seen on the table).
7. Screw the field attachable connector together.
8. Tighten the cable strain relief.

3.4.2 Cable for the barcode system

Acccessory	Order destination	Order numer
Connecting cable ENT-DC --- PSCAN-B TERMEX --- PSCAN-B VisuNet Ex1 --- PSCAN-B core cable ends --- M12 field attachable connector (5-polig)	DATL-A4-0,5-3	230262

Connecting cable DATL-A4-0,5-3

PSCAN-B Male receptacle M12 5-pin	Colour	Signal	ENT-DC connection to	TERMEX terminal compartement pin assignment	VisuNet Ex1 terminal compartment pin assignment
1	blue	GND	X3.4	X2.4	X2.16
2	grey	RX	X3.2	X2.2	X2.14
3	yellow	TX	X3.1	X2.1	X2.15
4	red	US	X3.3	X2.3	X2.13
5	n.c.	n.c.	n.c.	n.c.	n.c.

Note!

Further cables which lead from ENT-DC / TERMEX / VisuNet to connected devices please refere to the manuals of the devices.

3.4.3 Grounding base station PSCAN-B

Danger!

danger of explosion

In the event the warning is ignored, the consequences may range from personal injury to death.

Connect the earth stud with the equipotential bonding of the system. (cross section min. 4 mm^2)

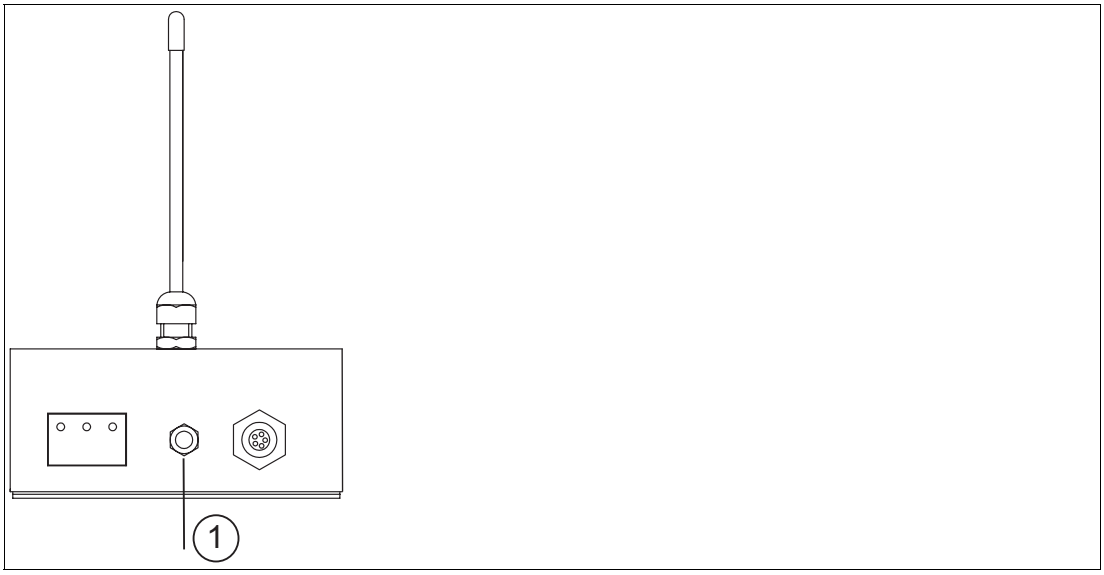

Figure 3.10 Grounding PSCAN-B

1 Equipotential bonding

Put the grounding on the equipotential bonding

Note!

Depending on the grounding cable you need the adequate cable lug (not included in scope of supply).

1. Insert the grounding cable into a cable lug (4).
2. Unscrew the M4 screw nut (3) on ground connection.
3. Insert the cable of the cable lug between the 2 washers (1).
4. Tighten the screw nut.

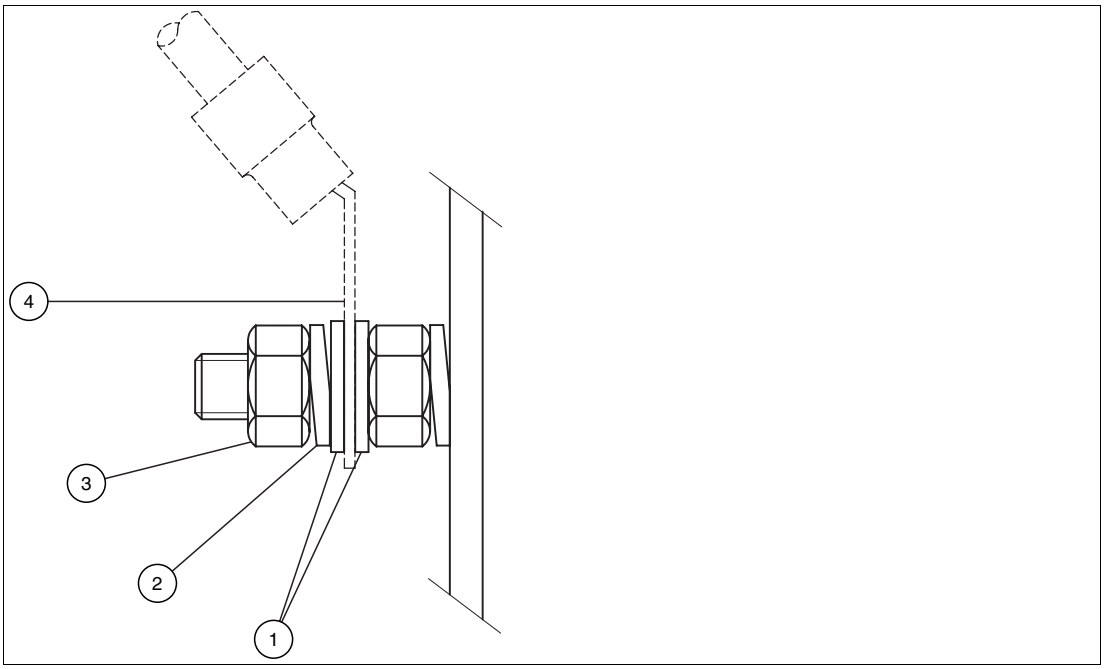

Figure 3.11 Equipotential bonding at the housing

1 washer
2 lock washer
3 screw nut
4 cable lug

3.4.4 Status indicators PSCAN-M wireless handheld barcode reader

The handheld barcode reader have two LEDs and a beeper. They signal several operating conditions which are described in the tables.

Legend	
H	high tone
T	low tone
*	Tone and intensity are user-configurable
#	The good transmission beeper can be disabled

Power up	
Beeper*	**Meaning**
TTTT	Parameters loading correctly
H H H H lange Töne	Parameters loading error, reading or writing error in the non-volatile memory
HTHT	Hardware error in 'EEPROM

Configuration	
Beeper*	**Meaning**
HHHH	Correct entry or exit from configuration mode
T	Good read of a command
TTT	Command read error

Data entry			
Beeper*	**LED**	**Good Read Spot**	**Meaning**
One beep #	on	on	Correct read of a code in normal mode
H T long			TX buffer full (when FIFO is enabled) or TX errror between PSCAN-M and PSCAN-B
H long	on	on	Successful advanced format concatenation
H H H			Timeout expired, operation not completed
H H long			Error in advanced data formatting

3.4.5 Status indicators PSCAN-B base station

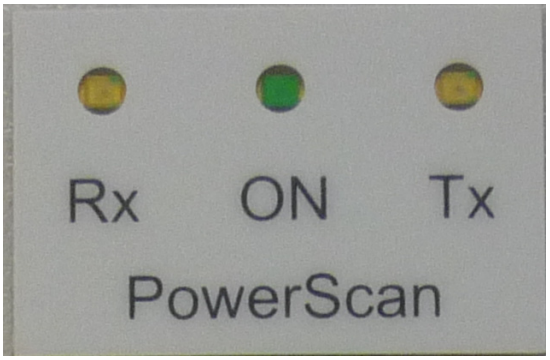

Figure 3.12 Status indicators PSCAN-B

Rx LED yellow	ON LED green	Tx LED yellow	Meaning
blinking			Data traffic
off			no data traffic
	on		Power on
	off		Power off
		blinking	Data traffic
		off	no data traffic

3.4.6 Status indicators PSCAN-C charger

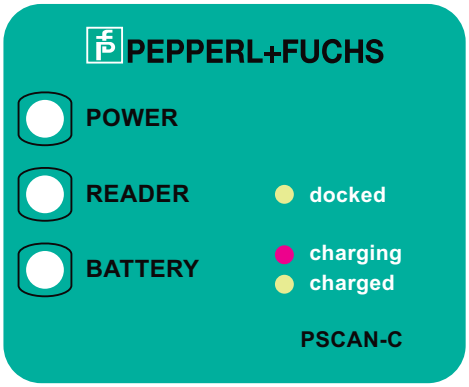

Figure 3.13 Status indicators PSCAN-C

POWER LED	READER LED	BATTERY LED	Meaning
off			Power off
green			Power on
	green		PSCAN-M is correctly docked onto charger
	off		No device is docked onto charger
		red	PSCAN-M battery in charge
		green	PSCAN-M battery completely charged

3.5 Mounting the holder for handheld barcode reader

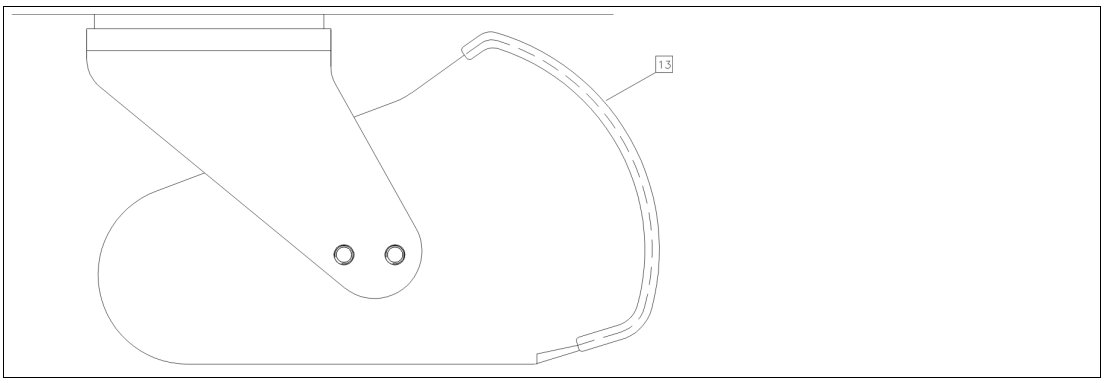

13 edge protection

Hole pattern holder for handheld barcode reader

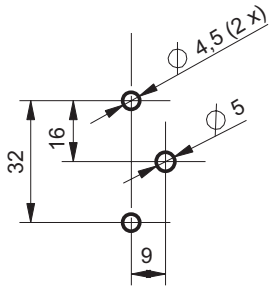

Holder for handheld barcode reader, top view

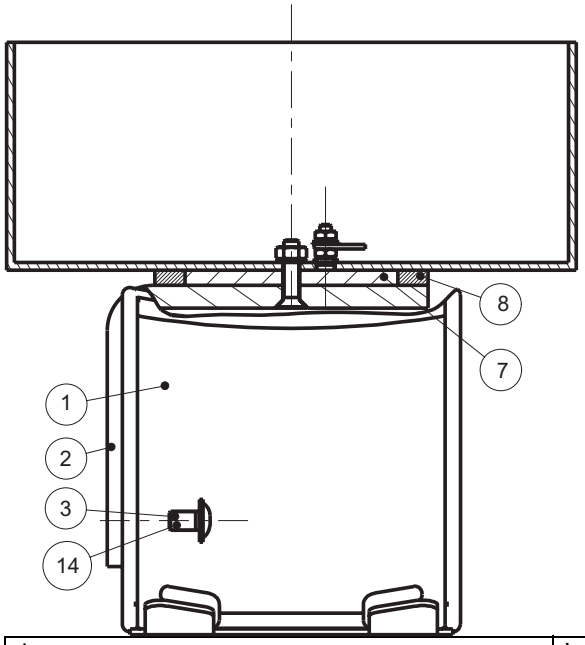

1	holder for handheld barcode reader
2	adapter
3	allen head screw with flange
7	distance plate
8	seal
14	thread lock (Loctite)

Contact holes

1. Contact 2 holes for fastening the holder for handheld barcode reader (2x Ø 4.5).
2. Contact 1 hole for the earth stud for equipotential bonding (1x Ø 5).

Installation

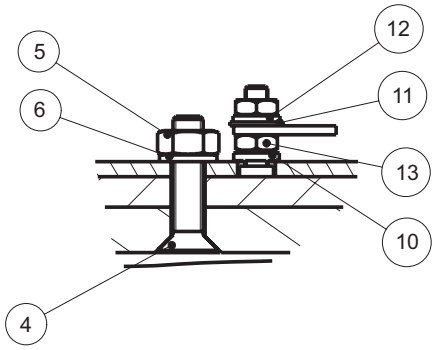

4	counter sunk screw M4 (2 x)
5	nut
6	lock washer
10	contact disk
11	seal
12	lock washer
13	nut

IInstalling the earth stud

Danger!
danger of explosion

In the event the warning is ignored, the consequences may range from personal injury to death.

Connect the earth stud with the equipotential bonding of the system.
(cross section min. 4 mm^2)

4 Configuration wireless barcode system

4.1 Quick start via TERMEX and VisuNet / stand-alone systems

Read enter configuration

$+

Set wireless handheld barcode reader address

RA0RF

+ four digits for wireless handheld barcode reader address
(0000 to 1999)

Delivery status: ID number: 0001

Joint the wireless handheld barcode reader to the base station

RS

Delivery status: ID number: 0001

Read exit and save configuration

$-

Read enter configuration

$+

Choose connection

Stand-alone and VisuNet connection
(9600 Baud (*))

CD6

Terminal connection TERMEX
(1200 Baud)

CD3

Read Parity EVEN

CC1

227735 2013-01

Read exit and save configuration

$-

4.2 Common notes for configuration

Note!

False configuration

The base station PSCAN-B is a special form of the radio/base station BC-80X0 of the company Datalogic. **Please use for configuration of the base station PSCAN-B exclusive the Pepperl+Fuchs manual.** Using the manual from Datalogic can lead to incorrect configuration: By multiple wrong configuration, (via Datatlogic manual) for example change to interface USB, loosing the entered number of the base staion, the PSCAN-B can be placed in a state which can not be undone locally.
In this case the base station PSCAN-B can be set to the right configuration only by returning to the company Pepperl+Fuchs and a paid repair.

To configure the system do the steps in the right order listed in the table.

Configuration wireless barcode system
Connecting base station with ENT-DC / Operator station / Operator panel and turn on the system
Define the address of the base station (ID number) (see chapter 4.3) (Sending a ASCII sequence of any kind of terminal program on the PC to the base station)
Configuring wireless handheld barcode reader and jont with base station (see chapter 4.4) (with the help of the wireless handheld barcode reader)
Configuring base station (see chapter 4.5) (with the help of the wireless handheld barcode reader)
Optional system configuration (with the help of the wireless handheld barcode reader)

Schema for wireless handheld barcode reader and base station identification
The handheld barcode reader stores up the handheld barcode reader ID and the base station ID. So the handheld barcode reader knows to which base station it belongs. the base station only knows its own ID. If the base station detects a telegram with its ID in the header it accepts the telegram and transfers the data to the host system. For the trasnmission from the host to the handheld barcode reader the host has to send a telegram with both IDs (base station and handheld barcode reader), to select the correct handheld barcode reader.

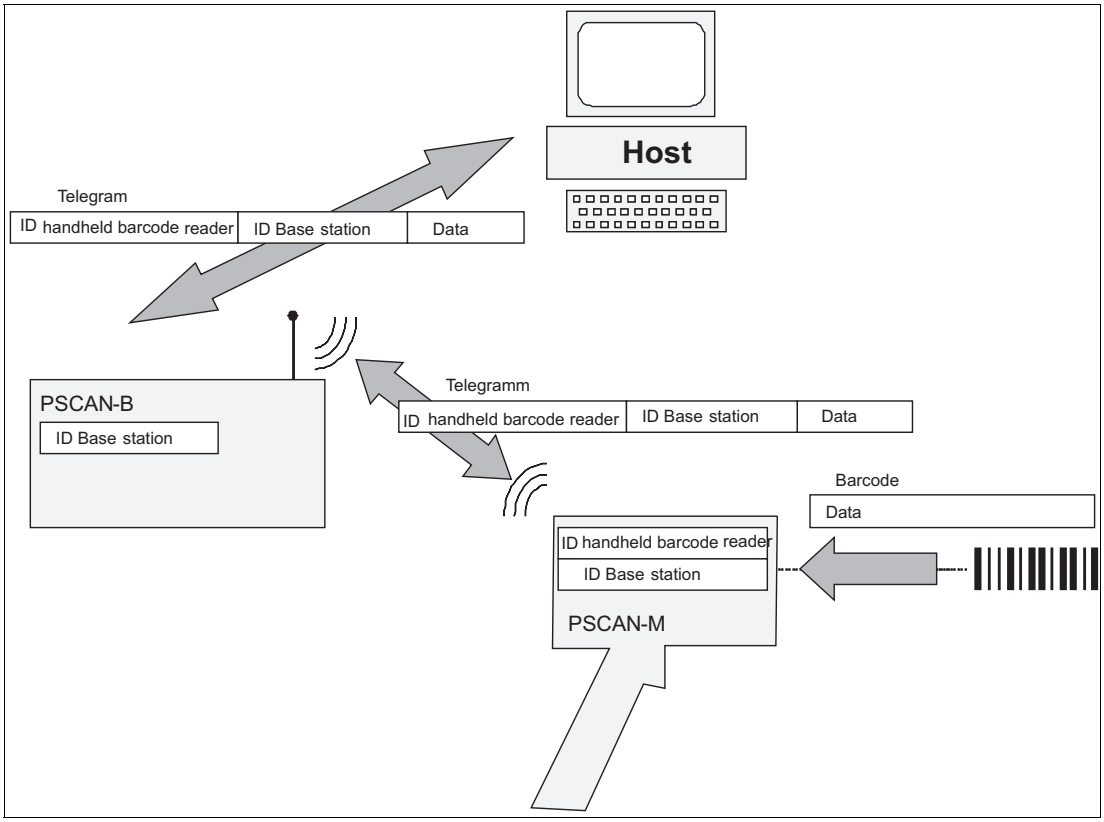

Figure 4.1 Schema for identification for PSCAN-M and PSCAN-B

Using several handheld barcode readers with one base station
If you want to use several handheld barcode readers associated with the same base station, you must join all handheld barcode readers with the same base station address.

4.3 Define the address of the base station PSCAN-B

When the base station PSCAN-B is connected and powered, configure it by sending the following telegrams to it in the given sequence and follow the instructions.

Note!

Delivery status PSCAN-M / PSCAN-B

- PSCAN-M ID number: 0001
- PSCAN-B ID number: 0001

Note!

Use any kind of terminal programm on the PC to send the ASCII sequence to the base station.

Define the address of the base station (PSCAN-B)

1. Type "$+RCxxxx$-" . (xxxx is a variable for a 4 digit address like 0005)
2. Type "<CR>.

Note!

All base stations used in the same area must have different addresses.(ID numbers).

Note!

All typed telegrams must end with <CR>, (HEX 0D). This adjustment must be activated in the terminal program.

Note!

Use pages at the end of this manual for Numeric code selections.

Caution!

Malfunction

Define the base station with an ID number. If the base station is not configured with an ID number, its address assumes a random value which can cause conflicts and malfunction to other base stations within its range.

4.4 Configure wireless handheld barcode reader (PSCAN-M) and join with base station (PSCAN-B)

Note!

Delivery status PSCAN-M / PSCAN-B

- PSCAN-M ID number: 0001
- PSCAN-B ID number: 0001

Read enter configuration

$+

Set date

IA

+ six digits for Day, Month and Year (DDMMYY)

Set time

IB

+ four digits for Hours and Minutes (HHMM)

Set wireless handheld barcode reader address

+ four digits for wireless handheld barcode reader address
(0000 to 1999)

RA0RF

Join the handheld barcode reader to the base station

+ four digits for base station address
(0000 to 1999)

RS

Read Aiming system enable

Bj1

Read exit and save configuration

$-

4.5 Configure base station (PSCAN-B) (by the wireless handheld barcode reader)

Delivery status PSCAN-B: Serial interface		
Parameter	**Delivery status**	
	5 mA (Terminal (TERMEX) connection)	**20 mA (ENT-DC / VisuNet connection)**
Baud-Rate	1200	9600
Parity	EVEN	EVEN
Data bits	8	8
Stop bit	1	1

Note!

Delivery status PSCAN-M / PSCAN-B

- PSCAN-M ID number: 0001
- PSCAN-B ID number: 0001

Configuration PSCAN-B-E2-EU-**-A-10-N	
Version: PSCAN-B-E2-EU-**05**-A-10-N	Version: PSCAN-B-E2-EU-**20**-A-10-N
Terminal (TERMEX) connection 1200 Baud	ENT-DC / VisuNet connection 9600 Baud

Enter configuration

$+

Choose connection

ENT-DC connection / VisuNet connection
(9600 Baud (*)

CD6

Terminal (TERMEX) connection
(1200 Baud)

CD3

Parity EVEN

CC1

Exit and save configuration

$-

227735 2013-01

4.6 Default PSCAN-M

Restore PSCAN-B default
$+$*

Default Data Format	
Parameters	**Default**
Code Identifier	disabled
Custom code identifier	disabled
Header	non
Terminator	non
Field Adjustment	disabled
Field Adjustment character	disabled
Code length Tx	not transmitted
Character Replacement	disabled
Adress Stamping	disabled
Adress Delimiter	disabled
Time Stamping	disabled
Time Delimiter	disabled

Default Power save	
Parameter	**Default**
Sleep state	disable
Enter sleep timeout	0,6 sec.

Default Reading Parameter	
Parameter	**Default**
Trigger type	Hardware trigger
Trigger signal	Trigger active level
Trigger click	Disabled
Trigger-off timeout	Disabled
Flash Mode	on 1 sec., off 0,6 sec.
Reads per cycle	1
Safety time	0.5 sec.
Beeper intensity	High intensity
Beeper tone	Ton 2
Beeper type	Monotone
Beeper length	Short
Good read spot duration	Medium
Aiming system	Disabled

227735 2013-01

Default Decoding Parameters	
Parameter	**Default**
Ink Spread	enabled
Overflow Control	enabled
Interdigit Control	enabled
Decoding Safety	one read
Puzzle Solver	disabled

Default Code selection	
Parameter	**Default**
EAN /UPC - Family	EAN 8/EAN 13 / UPC A/UPC E Check digit control no conversion
2/5 Family	Interleaved 2/5 Check digit control and transmission variable code length: 4-55 characters
Code 39 Family	Standard Code 39 no check digit control variable code length: 1-99 characters
Code 128 Family	Code 128 Check digit control without transmission Add GS before code = disabled
Code 93	disabled
Codabar Family	disabled
MSI	disabled
Code 11	disabled
Code 16K	disabled
Code 49	disabled
GS1 DATABAR Codes	disabled

Default Advanced Formatting	
Parameter	**Default**
Concatenation	disabled
Advanced Formatting	no Advanced Formatting enabled

Default Radio Parameters	
Parameters	**Default**
Radio Protocol timeout	2 seconds
Radio RX timeout	disabled
Power-off timeout	10 min., not changeable
Transmission mode	one way
Beeper control for radio response	normal
Single store	disabled
Batch mode	disabled
Find me	enabled

Default Display Parameters	
Parameters	**Default**
Contrast	normal
Font Size	small
Backlight	disabled
Display-off Timeout	after 8 seconds
Display Mode	local echo
Keypad	enabled (links '<', center '=', rechts '>')

4.7 Default PSCAN-B

Restore PSCAN-B default
$+RX0$-

Default serial interface	
Parameter	**Default**
Baud Rate	9600
Parity	disabled
Data Bits	8
Stop Bits	1
Handshaking	disabled
ACK/NAK Protocol	disabled
FIFO	enabled
Inter-Character Delay	disabled
Rx Timeout	5 sec
Serial Trigger Lock	disabled

Delivery status PSCAN-B: Serial interface		
Parameter	**Delivery status**	
	5 mA (Terminal (TERMEX) connection)	**20 mA (ENT-DC / VisuNet connection)**
Baud-Rate	1200	9600
Parity	EVEN	EVEN
Data bits	8	8
Stop bit	1	1

4.8 Parameter serial interface

Default serial interface	
Parameter	**Default**
Baud Rate	9600
Parity	disabled
Data Bits	8
Stop Bits	1
Handshaking	disabled
ACK/NAK Protocol	disabled
FIFO	enabled
Inter-Character Delay	disabled
Rx Timeout	5 sec
Serial Trigger Lock	disabled

Der Defaultwert ist mit (*) gekennzeichnet:

To change the default values

1. Read the "Enter Configuration" code once.
2. Read configuration codes from the desired groups or follow the procedure given for this code group.
3. When desired you can change further configuration codes directly.
4. Read the "Exit and Save Configuration" code once.

4.8.1 Baud Rate

Enter configuration

$+

Exit and save configuration

$-

Baud Rate

300 Baud

CD1

600 Baud

CD2

1200 Baud

CD3

2400 Baud

CD4

Enter configuration

$+

Exit and save configuration

$-

4800 Baud

CD5

9600 Baud (*)

CD6

19200 Baud

CD7

38400 Baud

CD8

4.8.2 Parity

Enter configuration

$+

Exit and save configuration

$-

Parity

Parity disabled (*)

CC0

Parity even

CC1

Parity odd

CC2

227735 2013-01

4.8.3 Data bits

Enter configuration

$+

Exit and save configuration

$-

Data bits

7 Data bits

CA0

8 Data bits (*)

CA1

9 Data bits

CA2

4.8.4 Stop bits

Enter configuration

$+

Exit and save configuration

$-

Stoppbit

1 Stop bit (*)

CB0

2 Stop bits

CB1

4.8.5 Handshaking

Enter configuration

$+

Exit and save configuration

$-

Handshaking

Enter configuration

$+

Exit and save configuration

$-

Transmission without handshaking (*)

CE0

Hardware RTS/DTR

CE1

Software XON/XOFF

CE2

RTS always on

CE3

4.8.6 ACK/NACK Protocol

Enter configuration

$+

Exit and save configuration

$-

ACK/NACK Protocol

disable (*)

ER0

enable

ER1

4.8.7 FIFO

Enter configuration

$+

Exit and save configuration

$-

FIFO

disable

EC0

enable (*)

EC1

227735 2013-01

4.8.8 Inter-Character Delay

Enter configuration

$+

Exit and save configuration

$-

Inter-Character Delay

Inter-Character delay
(Delay between characters transmitted to host)

CK

Read 2 numbers from the table where
00 = Delay disabled (*)
01-99 = Delay from 1 to 99 milliseconds

4.8.9 RX Timeout

Enter configuration

$+

Exit and save configuration

$-

RX Timeout

Timeout control in reception from Host

CL

Read 2 numbers from the table where

00 = Timeout disabled
50 = RX timeout 5 sec (*)
01-99 = Timeout from 0.1 bis 9.9 seconds

4.8.10 Serial Trigger Lock

Enter configuration

$+

Exit and save configuration

$-

Serial Trigger Lock

Disabled (*)

CR0

Enable and select characters

CR1

Read 2 characters from Hex/Numeric talbe in the range 00-FE where
First character enables divice trigger
Second character inhibits divice trigger until the first character is received again.

4.9 Data Format

Default Data Format	
Parameters	**Default**
Code Identifier	disabled
Custom code identifier	disabled
Header	non
Terminator	non
Field Adjustment	disabled
Field Adjustment character	disabled
Code length Tx	not transmitted
Character Replacement	disabled
Adress Stamping	disabled
Adress Delimiter	disabled
Time Stamping	disabled
Time Delimiter	disabled

The Default value ist signed with (*)

To change the default values

1. Read the "Enter Configuration" code once.
2. Read configuration codes from the desired groups or follow the procedure given for this code group.
3. When desired you can change further configuration codes directly.
4. Read the "Exit and Save Configuration" code once.

Code identifier table

Code	AIM Standard	Datalogic Standard	Custom
2/5 interleaved	]Iy	N	
2/5 industrial	]Xy	P	
2/5 normal 5 bars	]Sy	O	
2/5 matrix 3 bars	]Xy	Q	
EAN 8	]E4	A	
EAN 13	]E0	B	
UPC A	]Xy	C	
UPC E	]Xy	D	
EAN 8 with 2 ADD ON	]E5	J	
EAN 8 with 5 ADD ON	]E6	K	
EAN 13 with 2 ADD ON	]E1	L	
EAN 13 with 5 ADD ON	]E2	M	
UPC A with 2 ADD ON	]Xy	F	
UPC A with 5 ADD ON	]Xy	G	
UPC E with 2 ADD ON	]Xy	H	
UPC E with 5 ADD On	]Xy	I	

227735 2013-01

Code	AIM Standard	Datalogic Standard	Custom
Code 39	]Ay	V	
Code 39 Full ASCII	]Ay	W	
CODABAR	]Fy	R	
ABC CODABAR	]Xy	S	
Code 128	]Cy	T	
EAN 128	]Cy	k	
ISBT 128	]C4	f	
Code 93	]Gy	U	
CIP/39	]Xy	Y	
CIP/HR	]Xy	e	
Code 32	]Xy	X	
MSI	]My	Z	
Code 11	]Hy	b	
Code 16 K	]K0	p	
Code 49	]Ty	q	
GS1 DataBarTM Expanded and Stacked	]e0	t	
GS1 DataBar Limited	]e0	v	
GS1 DataBar 14 Linear and Stacked	]e0	u	

Reference

AIM standard identifiers are not defined for all codes: the X identifier is assigned to the code for which the standard is not definded. The y value depends on the selected options (check digit tested or not, check digit tx or not , ect.).

When customizing the Datalogic Standard code identifiers, 1 or 2 identifier character can be defined for each code type. If only 1 identifier character is required, the second character must be selected as FF (disabled).

The code identifier can be singly disabled for any code by simply selecting FF as the first identifier character.

Write in the Custom character identifiers in the table above for your records.

4.9.1 Code Identifier

Enter configuration

$+

Exit and save configuration

$-

Code Identifier

disabled (*)

EB0

Datalogic standard

EB1

AIM standard

EB2

Custom

EB3

4.9.2 Custom Code Identifier

Enter configuration

$+

Exit and save configuration

$-

Custom code identifier

Default: disabled

Define costom code identifiers

EH

1.) Read the left code (EH).
2.) Select the code type from the code table in for the identifier you want to change.
3.) You can define 1 or 2 identifier characters for each code type. If only 1 identifier character is required, the second character must be selected as FF (disabled). Read the hexadecimal value corresponding to the characters you want to define as identifiers for the code selected in step 2.) : valid characters are in the range 00-FD.

Example: To define the Code 39 Code, Identifier = @

EH

+ Code 39 + 40 +FF

227735 2013-01

4.9.3 Header

Enter configuration

$+

Exit and save configuration

$-

Header

no header (*)

EA00

one character header

EA01

two character header

EA02

three character header

EA03

four character header

EA04

five character header

EA05

six character header

EA06

seven character header

EA07

eight character header

EA08

After selecting one of the desired Header codes, read the character(s) from the Hex table. Valid characters are in the range 00-FE.

Example: four character header:

EA04

+ 41 42 43 44 =

Header ABCD

4.9.4 Terminator

Enter configuration

$+

Exit and save configuration

$-

Terminator

no terminator (*)

EA10

one character terminator

EA11

two character terminator

EA12

three character terminator

EA13

four character terminator

EA14

five character terminator

EA15

six character terminator

EA16

seven character terminator

EA17

eight character terminator

EA18

After selecting one of the desired Header codes, Terminator codes, read the character(s) from the Hex table. Valid characters are in the range 00-FE.

Example: four character terminator

EA14

+ 41 42 43 44 =

terminator ABCD

227735 2013-01

4.9.5 Field adjustment

Enter configuration

$+

Exit and save configuration

$-

Field adjustment

Default: disabled (*)

EF0

1.) To define the field adjustment (enable)

EF

2.) Read the enable field adjustment code:see chapter 7.2

3.) Select the type of adjustment to perform

right addition

0

left addition

1

right deletion

2

left deletion

3

4.) Read a number in the range 01 - 32 from the Hex/Numeric table to define how many characters to add or delete.

Example: To add 4 characters to the right of Standard Code 39 Codes:

Field Adjustment aktiviert +	Code 39 +	right addition + 04
EF	V	0

4.9.6 Field Adjustment character

Enter configuration

$+

Exit and save configuration

$-

Field Adjustment character

Default: disabled (*)

1.) Read the field adjustment character code

EG

2.) Read the hexadecimal value corresponding to the character you want to use for field adjustment. Valid characters are in range 00-FE.

Example: To define the field adjustment character = A

EG

+41

4.9.7 Code Length Tx

Enter configuration

$+

Exit and save configuration

$-

Code Länge Tx

not transmitted (*)

EE0

transmitted in variable-digit format

EE1

transmitted in fixed 4-digit format

EE2

227735 2013-01

4.9.8 Character Replacement

Enter configuration

$+

Exit and save configuration

$-

Character Replacement

disable character replacement (*)

E00

This parameter allows up to three characters to be replaced from the barcode read.

1.)
enable first character replacement

E01

enable second character replacement

E02

enable third character replacement

E03

2.) From the Code Identifier Table, read the Code Identifier for the desired code family see chapter 7.2
0 = character replacement will be effective for all code families.
3.) Read two characters corresponding to the Hex value (00-FE), which identifies the character to be replaced.
4.) Read two characters corresponding to the Hex value (00-FE) which identifies the new character to replace.
FF = the character to be replaced will be substituted with no character, that is, it will be removed from the code.

Example 1
First character replacement: substitution in Code 39 barcodes of all occurrences of the "0-character" with "1-character".
For Code 39 codes containing the string "**0**123" the contents transmitted will be"**1**123".

Enter configuration

$+

Exit and save configuration

$-

First character replacement +

E01

Code 39 +

V

ASCI characters corresponding to the HEX value for character 0 +

30

ASCI characters corresponding to the HEX value for character 1

31

Example 2
Second character replacement: substitution in Code 39 barcodes of all occurrences of the "A character" with the "B character".
For Code 39 codes containing the string "**A**BCD" the contents transmitted will be "**B**BCD".

Second character replacement +

E02

Code 39 +

V

ASCI characters corresponding to HEX value for character A +

41

ASCI characters corresponding to HEX value fpr character B

42

4.9.9 Address Stamping

Enter configuration

$+

Exit and save configuration

$-

Address Stamping

disable reader address stamping (*)

RU0

enable reader address stamping

RU1

disable cradle address stamping (*)

RW0

enable cradle address stamping

RW1

227735 2013-01

4.9.10 Address Delimiter

Enter configuration

$+

Exit and save configuration

$-

Address Delimiter

disable reader address delimiter (*)

RV0

enable reader address delimiter and select characters

RV1

1.) Read the left code (RV1).
3.) Select the code type from the code table in.
4.) Read the hexadecimal value corresponding to the character you want to use.
Valid characters are in range 00-FE.

disable cradle address delimiter(*)

RY0

enable cradle address delimiter and select characters

RY1

1.) Read the left code (RY1).
3.) Select the code type from the code table in.
4.) Read the hexadecimal value corresponding to the character you want to use.
Valid characters are in range 00-FE.

4.9.11 Time Stamping

Enter configuration

$+

Exit and save configuration

$-

Time Stamping

disable (*)

ILO

hour/minutes/seconds/month/day/year

IL1

Enter configuration	Exit and save configuration
$+	$-

hour/minutes/seconds/day/month/year IL2	hour/minutes/seconds IL3
month/day/year IL4	day/month/year IL5

4.9.12 Time Stamping Delimiter

Enter configuration	Exit and save configuration
$+	$-

Time Stamping Delimiter

disable (*) IM0	Select delimiter IM1 Read 2 HEX characters in the range 00-FE.

4.10 Power Save

Der Defaultwert ist mit (*) gekennzeichnet:

Default Power save	
Parameter	**Default**
Sleep state	disable
Enter sleep timeout	0,6 sec.

Der Defaultwert ist mit (*) gekennzeichnet:

To change the default values

1. Read the "Enter Configuration" code once.
2. Read configuration codes from the desired groups or follow the procedure given for this code group.
3. When desired you can change further configuration codes directly.

227735 2013-01

4. Read the "Exit and Save Configuration" code once.

4.10.1 Sleep State

Enter configuration	Exit and save configuration
$+	$-

Sleep state

disable	enable
BQ0	BQ1

The PSCAN-M barcode reader sleep state is entered immediately after reading a code and is not configurable.

4.10.2 Enter Sleep Timeout

Enter configuration	Exit and save configuration
$+	$-

Enter sleep timeout

Enter sleep timeout

BR

Read 2 numbers n the range 00-99:
00 = Enter sleep state immediately.
01 - 99 = corresponds to a max. 9.9 sec. delay before entering the sleep state.

4.11 Reading Parameters

Default Reading Parameter	
Parameter	**Default**
Trigger type	Hardware trigger
Trigger signal	Trigger active level
Trigger click	Disabled
Trigger-off timeout	Disabled
Flash Mode	on 1 sec., off 0,6 sec.
Reads per cycle	1
Safety time	0.5 sec.
Beeper intensity	High intensity
Beeper tone	Ton 2
Beeper type	Monotone
Beeper length	Short

Default Reading Parameter	
Good read spot duration	Medium
Aiming system	Disabled

The Default value is signed with (*).

To change the default values

1. Read the "Enter Configuration" code once.
2. Read configuration codes from the desired groups or follow the procedure given for this code group.
3. When desired you can change further configuration codes directly.
4. Read the "Exit and Save Configuration" code once.

4.11.1 Trigger Type

Enter configuration

$+

Exit and save configuration

$-

Trigger Type

Software trigger

BK0

Hardware trigger (*)

BK1

always on

BK3

4.11.2 Trigger Signal

Enter configuration

$+

Exit and save configuration

$-

Trigger Signal

Trigger active level (*)

BA0

Trigger active pulse

BA1

227735 2013-01

4.11.3 Trigger Click

Enter configuration

$+

Exit and save configuration

$-

Trigger Click

disable (*)

Bc0

enable

Bc1

4.11.4 Trigger-off Timeout

Enter configuration

$+

Exit and save configuration

$-

Trigger-off Timeout

Default: disabled (*)

Trigger-off Timeout changes

BD

Read 2 numbers in the range 00-99:
00 = disabels the trigger-off timeout (*)
01-99 = corresponds to a max. 99-sec. delay after the trigger press to allow the reader to turn off automatically.

4.11.5 Flash Mode

Enter configuration

$+

Exit and save configuration

$-

Flash Mode

Default Flash on: 1.0 sec. (*)
Default Flash off: 0.6 sec. (*)

Enter configuration

$+

Exit and save configuration

$-

Flash On duration

BB0

Flash off duration

BB1

Read 2 numbers in the range 01- 99.
01 to 99 = from 0.1 bis 9.9 seconds

4.11.6 Reads per cycle

Enter configuration

$+

Exit and save configuration

$-

Reads per cycle

One read per cycle (*)

BC0

Multiple reads per cycle

BC1

4.11.7 Safety Time

Enter configuration

$+

Exit and save configuration

$-

Safety Time

Default Safety time 0.5 sec. (*)

Safety Time

BE

Read 2 numbers in the range 00-99:
00 = no same code consecutive reading until reader is removed (no decoding) for at least 400 ms.
01 - 99 = Timeout from 0.1 to 9.9 seconds before a consecutive read on same code.

Limits**same**code consecutive reading.

227735 2013-01

4.11.8 Beeper Intensity

Enter configuration

$+

Exit and save configuration

$-

Beeper Intensity

Beeper off

BG0

Low intensity

BG1

Medium intensity

BG2

High intensity (*)

BG3

4.11.9 Beeper Tone

Enter configuration

$+

Exit and save configuration

$-

Beeper Tone

Tone 1

BH0

Tone 2 (*)

BH1

Tone 3

BH2

Tone 4

BH3

4.11.10 Beeper Type

Enter configuration

$+

Exit and save configuration

$-

Beeper Type

monoton (*)

BJ0

bitonal

BJ1

4.11.11 Beeper length

Enter configuration

$+

Exit and save configuration

$-

Beeper length

long

BI0

short

BI1

4.11.12 Good read spot duration

Enter configuration

$+

Exit and save configuration

$-

Good read spot duration

disable

BV0

short

BV1

medium (*)

BV2

long

BV3

227735 2013-01

4.11.13 Aiming System

Enter configuration

$+

Exit and save configuration

$-

Aiming System

disabled (*)

Bj0

enabled

Bj1

4.12 Decoding Parameters

Default Decoding Parameters	
Parameter	**Default**
Ink Spread	enabled
Overflow Control	enabled
Interdigit Control	enabled
Decoding Safety	one read
Puzzle Solver	disabled

The Default value is signed with (*).

Caution!

Malfunciton of the handheld barcode reader

With changing this parameters the reading performance can be degraded or increase the possibility of a decoding error.

These parameters must be absolutely correctly adjusted.

To change the default values

1. Read the "Enter Configuration" code once.
2. Read configuration codes from the desired groups or follow the procedure given for this code group.
3. When desired you can change further configuration codes directly.
4. Read the "Exit and Save Configuration" code once.

4.12.1 Ink spread

Enter configuration

$+

Exit and save configuration

$-

Ink spread

disable

AX0

enable (*)

AX1

4.12.2 Overflow Control

Enter configuration

$+

Exit and save configuration

$-

Overflow Control

disable

AW1

enable (*)

AW0

4.12.3 Interdigit Control

Enter configuration

$+

Exit and save configuration

$-

Interdigit Control

disable

AV0

enable (*)

AV1

227735 2013-01

4.12.4 Decoding Safety

Enter configuration

$+

Exit and save configuration

$-

Decoding Safety

one read (*)

ED0

two reads

ED1

three reads

ED2

four reads

ED3

4.12.5 Puzzle Solver

Enter configuration

$+

Exit and save configuration

$-

Puzzle Solver

disable (*)

AU0

enable

AU1

4.13 Code Selection

Default Code selection	
Parameter	**Default**
EAN /UPC - Family	EAN 8/EAN 13 / UPC A/UPC E Check digit control no conversion
2/5 Family	Interleaved 2/5 Check digit control and transmission variable code length: 4-55 characters
Code 39 Family	Standard Code 39 no check digit control variable code length: 1-99 characters
Code 128 Family	Code 128 Check digit control without transmission Add GS before code = disabled

Default Code selection	
Code 93	disabled
Codabar Family	disabled
MSI	disabled
Code 11	disabled
Code 16K	disabled
Code 49	disabled
GS1 DATABAR Codes	disabled

Code selections may be performed according to two different procedures.
Auto configuration - allowing an automatic recognition and selection of the code families to be read
Manual configuration - requiring configuration and selection of each code family to be read.

4.13.1 Code selection: Auto configuration

Note!

The following codes do not require reading the "Enter Configuration" and "Exit and save Configuration" codes.

In auto configuration mode the reader enters a particular state, during which it reads, recognizes and saves all information received from the decoding of an existing code (with the exception of MSI, Code 49 and Code 16k code types) . In this way, the code families will be automatically configured.
It is possible to configure up to 10 code types, whose length is variable and check digit ignored.
If reading different codes belonging to the same family, information about the last code will overwrite the information about the previous one.

Follow the given procedure to auto-configure the desired code families

Caution!

Failure

The handheld barcode reader is unable to read codes.

During the auto configuration procedure you must read a code. If no code is read the configuration will be empty and therefore the handheld barcode reader will be unable to read codes.

1. Read the following code to enter the auto configuration mode:

auto-configuration

2. Read an existing code belonging to the code families that you need to configure.
3. Read the following code to save the configuration automatically and return to the reader's normal functioning.

$-

227735 2013-01

If you need to change the configuration there are three possibilities

1. Repeat the auto configuration procedure, or
2. follow the manual configuration by setting the parameters for each single code family, or
3. Read the "Restore Default" code.
   Be careful that in the latter case all reader parameters will be restored.

4.13.2 Code selection: Manual configuration

To change the default values

1. Read the "Enter Configuration" code once.
2. Read configuration codes from the desired groups
   or follow the procedure given for this code group.
3. When desired you can change further configuration codes directly.
4. Read the "Exit and Save Configuration" code once.

Enter configuration	Exit and save configuration
$+	$-

Code selection

Disable all code families

AZ0

Note!

The reader allows up to 10 code selections. This does not limit the number of CODES enabled to 10, as it depends on the code family.

Single selection =	**ONE combination code** from the EAN family
	ONE code from the 2/5 family

Example

5 code selections:

1. **2/5 Interleaved**
2. **2/5 Industrial**
3. Code 128 + EAN 128
4. Code 39 Full ASCI + Code 32
5. **UPC A/UPC E**
6. etc.

In this section all **SINGLE** code selections are in **bold text.**

EAN/UPC - Family

Enter configuration

$+

Exit and save configuration

$-

EAN/UPC - FAMILY

disable the family EAN/UPC

AA0

EAN 8/EAN 13/UPC A/UPC E with and without ADD ON

AA8

without ADD ON

EAN 8/EAN 13/UPC A/UPC E (*)

AA1

EAN 8/EAN 13

AA3

UPC A/UPC E

AA4

with ADD ON 2 and 5

EAN 8/EAN 13/UPC A/UPC E

AA5

EAN 8/EAN 13

AA6

UPC A/UPC E

AA7

with ADD ON 2 only

227735 2013-01

Enter configuration

$+

Exit and save configuration

$-

EAN 8/EAN 13

AAK

UPC A/UPC E

AAM

with ADD ON 5 only

EAN 8/EAN 13

AAL

UPC A/UPC E

AAN

with and without ADD ON

EAN/UPC with and without ADD ON no autodiscrimination (*)

AA8Ad0

EAN/UPC autodiscrimination ADD ON by prefix

AA8Ad1

SELECT EAN/UPC PREFIXES

Note!

When scanning the following codes, barcodes starting with the selected prefixes will be read and transmitted only if the ADD ON is present. If no ADD on is found, the barcode will not be read. Barcodes starting with different characters are read regardless of ADD ON presence and transmitted always without ADD ON.

Enter configuration

$+

Exit and save configuration

$-

Cancel all selections (*)

ET0

select one or more of the following prefixes:

Enter configuration

$+

Exit and save configuration

$-

378/379

ET1378ET2379

434/439

ET3434ET4439

414/419

ET5414ET6419

977

ET7977

978

ET8978

979

ET9979

The commands above are not mutually exclusive. They can be used to configure more than one set of prefixes simultaneously.

Example

The following string allows reading and transmitting with ADD ON all EAN/UPC starting with the 434/439, 977 and 978 prefixes.

1. EAN/UPC Autodiscrimination ADD ON by Prefix.
2. 434/439: enables reading and transmission with ADD ON of all EAN/UPC barcodes starting with 434/439 prefixes.
3. 977: enables reading and transmission with ADD ON of all EAN/UPC barcodes starting with 977 prefix.
4. 978: enables reading and transmission with ADD ON of all EAN/UPC barcodes starting with 978 prefix.

EAN/UPC Autodiscrimination
ADD ON by prefix +

AA8Ad1

434/439 +

ET3434ET4439

977 +

ET7977

978 +

ET8978

To clear the current prefix selections:

1.) Cancel all selections

ET0

Enter configuration	Exit and save configuration
$+	$-

EAN/UPC CHECK DIGIT TX SELECTIONs
For each code type in this family you can choose to transmit the check digit or not.

EAN 8 Check Digit Transmission

disabled

AAG0

enabled (*)

AAG1

EAN 13 Check Digit Transmission

disabled

AAH0

enabled (*)

AAH1

UPC A Check Digit Transmission

Enter configuration

$+

Exit and save configuration

$-

disabled

AAI0

enabled (*)

AAI1

UPC E Check Digit Transmission

disabled

AAJ0

enabled (*)

AAJ1

CONVERSION OPTIONS

UPC E to UPC A conversion

AAA

UPC E to EAN 13 conversion

AAB

UPC A to EAN 13 convertion

AAC

EAN 8 to EAN 13 convertion

AAD

ISBN Conversion Codes

Enable only ISBN

AP1

Enable only ISSN

AP2

Enable ISBN and ISSN

AP3

Disable ISBN and ISSN

AP0

227735 2013-01

2/5 - Family

Enter configuration

$+

Exit and save configuration

$-

2/5 - FAMILY

disable the Family 2/5

AC0

- Read the desired family code.

Interleaved 2/5 (*)

AC1

Normal 2/5 (5 Bars)

AC2

Industrial 2/5 (IATA)

AC3

Matrix 2/5 (3 Bars)

AC4

- Read the check digit selection

no check digit control

1

check digit control and transmission

2

check digit control without transmission

3

- Read 4 numbers for the code length where:

First 2 digits = minimum code length

Second 2 digits = maximus code length

The maximum code length is 99 characters.
The minimum code length must always be less than or equal to the maximum.
Examples:
0199 = variable from 1 to 99 digits in the code.
1010 = 10 digit code length only.

Enter configuration

$+

Exit and save configuration

$-

French pharmaceutical code

The pharmaceutical code below is part of the 2/5 family but has no check digit or code length selection.

Code CIP/HR (french pharmaceutical code)

AC5

Code 39 - Family

Enter configuration

$+

Exit and save configuration

$-

Code 39 - FAMILY

disabled the Code 39 family

AB0

- Read the desired family code.

Standard Code 39 (*)

AB1

Full ASCII Code 39

AB2

- Read a check digit selection

no check digit control (*)

1

Check digit control and transmission

2

227735 2013-01

Enter configuration

$+

Exit and save configuration

$-

Check digit control without transmission

3

French pharmaceutical code and Italian pharmaceutical code

The pharmaceutical codes below are part of the Code 39 family but have no check digit selections.

Code CIP 39 (French pharmaceutical code)

AB3

Code 32 (Italian pharmaceutical code)

AB4

Code Length optional
The code length selection is vaild for the entire Code 39 family

Set Code length

AB*

Read the code + 4 numbers for the code length where
First 2 digits = minimum code length
Second 2 digits = maximum code length

The maximum code length is 99 characters.
The minimum code length must always be less than or equal to the maximum.
Examples
0199 = Code length variable from 1 to 99
1010 = 10 digit code length only.

Code 128 - Family

Enter configuration

$+

Exit and save configuration

$-

Code 128 - FAMILY

disable the Code 128 family

AI0

- Read the desired family code.

Enter configuration

$+

Exit and save configuration

$-

Code 128 (*)
control without transmission of check digit

AI11

ISBT 128
enabling ISBT 128 automatically disables Puzzle Solver

AI31

EAN 128
control without transmission of check digit

AI21

Transmit GS Before Code

disable (*)

EQ0

enable

EQ1

Code length optional
The code length selection is valid for the entire 128 family.

Set code length

AIL

Read the code +4 numbers for the code length where:
First 2 digits = minimum code length
Second digits = maximum code length

The maximum code length is 99 characters.
The minimum code length must always be less than or equal to the maximum.
Examples:
0199 = variable from 1 to 99 digits in the code.
1010 = 10 digit code length only.

Code 93 - Family

Enter configuration

$+

Exit and save configuration

$-

Code 93 FAMILY

disable Code 93 family (*)

AK0

Code 93
control without transmission of check digit

AK1

Codabar Family

Enter configuration

$+

Exit and save configuration

$-

Standard Codabar

- Read the desired equality control code.

Standard Codabar
no start/stop character equality control

AD11

Standard Codabar
Start/stop character equality control

AD12

- Read a start/stop transmission selection

no transmission

1

transmission

2

Codabar ABC

Enter configuration

$+

Exit and save configuration

$-

Codabar ABC forced concatenation
enable Codabar ABC with forced concatenation
non start/stop character equality control but transmission

AD232

Codabar ABC
The Codabar ABC code below uses a fixed start/stop character transmission selection.
non start/stop character equality control but transmission

AD212

Code length optional
The code length section is vaild for the entire Codabar family.

Set code length

AD*

Read the code + 4 numbers for the code length where
First 2 digits = minimum code length.
Second 2 digits = maximum code length.

The maximum code length is 99 characters.
The minimum code length must always be less than or equal to the maximum.
Examples:
0199 = variable from 1 to 99 digits in the code.
1010 = 10 digit code length only.

Start / Stop character case in transmission

transmit start/stop characters in lower case

ADA0

transmit start/stop character in upper case

ADA1

MSI - Family

Enter configuration

$+

Exit and save configuration

$-

MSI

disable the family MSI (*)

AE0

Enable the code by selecting one of the check digit selections.
no check = no check digit control
no tx = no check digit transmission

227735 2013-01

Enter configuration

$+

Exit and save configuration

$-

no check

AE1

MOD 10 no tx

AE2

MOD 10 with tx

AE3

MOD 11 - MOD 10 no tx

AE4

MOD 11 - MOD 10 with tx

AE5

MOD 10 - MOD 10 no tx

AE6

MOD 10 - MOD 10 with tx

AE7

Code 11

Enter configuration

$+

Exit and save configuration

$-

Code 11

disable the Code 11 family (*)

AG0

Enable the code by selecting one of the check digit selections.
no check = no check digit control
tx = transmission

Enter configuration

$+

Exit and save configuration

$-

no check

AG1

Type C with tx

AG21

Type C no tx

AG22

Type K with tx

AG31

Type K no tx

AG32

Type C and type K with tx

AG41

Type C and type K no tx

AG42

Code 16K

Enter configuration

$+

Exit and save configuration

$-

Code 16K

disable Code 16K (*)

AJ0

enable Code 16K

AJ1

227735 2013-01

Code 49

Enter configuration

$+

Exit and save configuration

$-

Code 49

disabled Code 49 (*)

AM0

enabled Code 49

AM1

Code GS1 Databar Code Family

Enter configuration

$+

Exit and save configuration

$-

Code GS1 Databar Code Family

disabled GS1 Databar Code Family (*)

AQ0

GS1 Databar Expanded Linear and Stacked

disabled

AQ10

enabled

AQ11

GS1 Databar limited

disabled

AQ20

enabled

AQ21

GS1 Databar Linear and Stacked

disabled

AQ30

enabled

AQ31

4.14 Advanced Formatting

Default Advanced Formatting	
Parameter	**Default**
Concatenation	disabled
Advanced Formatting	no Advanced Formatting enabled

The Default value is signed with (*)

To change the "Advanced Formatting" Default values

1. Read the "Enter Configuration" code once.
2. Read the configuration codes precisely following the numbered procedure given.
3. When desired you can change further configuration codes directly.
4. Read the "Exit and Save Configuration" code once.

4.14.1 Concatenation

Concatenation

Enter configuration

$+

Exit and save configuration

$-

Concatenation disable (*)

EI0

Concatenation enable
Permits the concatenation of two codes defined by code type and length. It is possible to set a timeout for the second code reading and to define code transmission if the timeout expires. The order of transmission is CODE 1 - CODE 2.

EI1

Define Concatenation Code 1
Code ID

EK0

Read the code type from the Code Identifier table.

Code length

EL0

Read an number in the range 0-99 from the Hex/Numeric table.

227735 2013-01

Enter configuration

$+

Exit and save configuration

$-

Define Concatenation Code 2
Code ID

EK1

Read the code type from the Code Identifier table.

Code length

EL1

Read an number in the range 0-99 from the Hex/Numeric table.

Concatenation Result Code ID
Since you can concatenate codes from different families, you must select the Code ID character of the resulting code. The Code ID character will be sent in the output message only if it is enabled according to the Code Identifier selection.

Use Code 1 ID

EN0

Use Code 2 ID

EN1

ConcatenationTimeout

EJ

Read two numbers in the range 00 to 99.
00 = no Timeout
01-99 = Timeout from 1 to 99 seconds
Define the timeout, which determines the valid waiting period between the two codes, in order to accept concatenation. If the timeout expires, the resulting action will be based on the following selection..
Transmission after Timeout

no code transmitted after Timeout

EM0

only code 1 transmitted (if read) after timeout

EM1

Only code 2 transmitted (if read) after timeout

EM2

Either code 1 or code 2 transmitted after timeout

EM3

4.14.2 Advanced Formatting

Advanced Formatting

Advanced formatting has been designed to offer you complete flexibility in changing the format of barcode data before transmitting it to the host system. This formatting will be performed when the barcode data meets certain criteria, which you will define in the following procedure. Up to 4 advanced code management formats can be defined and saved in memory. For each format you must complete the entire configuration procedure.

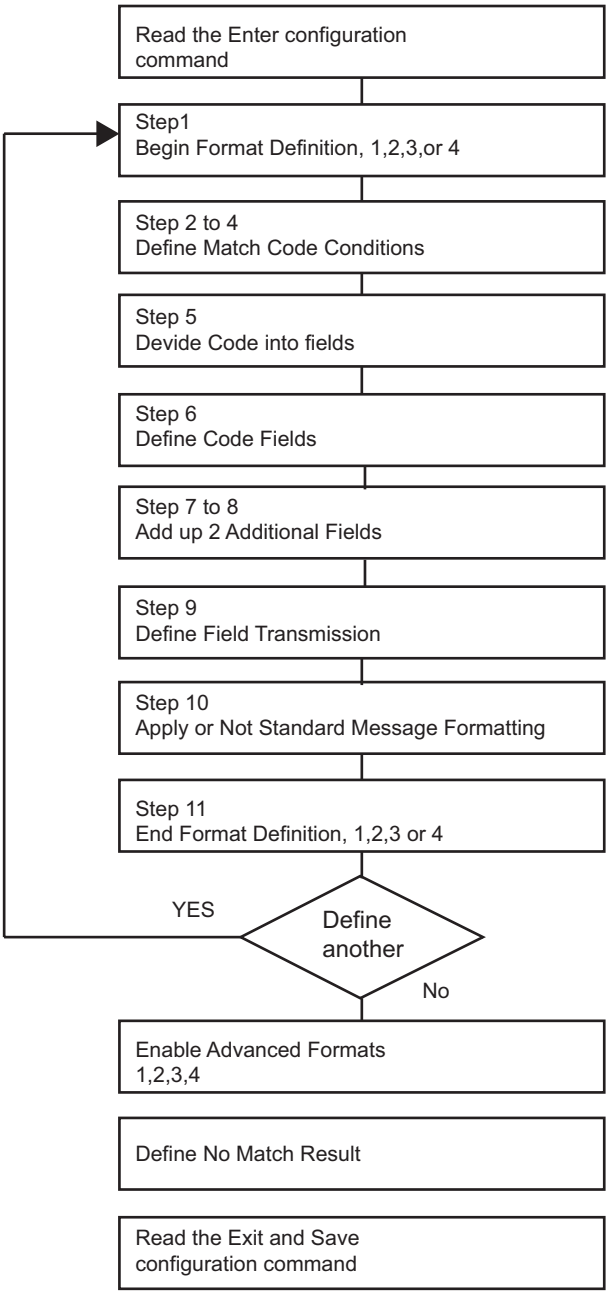

Enter configuration

$+

Exit and save configuration

$-

Step 1 Begin Format Definition

Begin format 1 definition

HA0

Begin format 2 definition

HA1

Begin format 3 definition

HA2

Begin format 4 definition

HA3

Step 2 Match Code Type

Match Code Type

HB

or any code type

HB0

Read the above code + the code type to match from the Code Identifier Table see chapter 7.2 .

Step 3 Match Code Length

Match Code length

HC

or any code length

HC00

Read the above code + two numbers in the range 01 to 99 for the exact code length.

Step 4 Match with Predefined Characters

no match

HD0HE00

or

Match with 1 character

HD1

Match with a 2-character string

HD2

Enter configuration

$+

Exit and save configuration

$-

Match with a 3-character string

HD3

Match with a 4-character string

HD4

After selecting the predefined match code, read the character(s) from the HEX table. Range of characters = 00 to FE

Example
Match Code with the 2-character predefined string ="@@" einlesen

HD2 + 40 + 40

and position of first character in predefined string

HE

Read the above code + two numbers in the range 01 to 99 representing the character position in the code where the first character of the predefined string must be found.
Read 00 if the match string can be found in any character position.

Step 5 Divide Code into Fields

Divide code into fields

HF

Read one number in the range 1 to 5 to divide the code into fields.

Enter configuration

$+

Exit and save configuration

$-

Step 6 Define Code Fields
Each code field length can be set by either:

1. Defining a **field separator character to be found in the code itself**. In this case you can choose to discard the code separator character or include it as the last character of the field.
   or by
2. Defining a **match character to be found consecutively repeated in the code itself**. In this case the field ends with the first character that does not match.
   or by
3. Specifying a **specific character length** up to maximum of 99 characters.
   or by
4. Selecting **the last field as variable length** (if any).
   You must define the same number of fields as selected in step 5, including fields that will not be transmitted.

Define field 1 by
either
1.) Field separator

HG0

Read the field separator character from the HEX table. Range of characters = 00 to FE.

discard separator

0

include separator

1

or 2.) Match character

HG3

Read the match character from the HEX table = 00 to FE.

or 3.) Field length

HG1

Read two numbers in the range 01 to 99 to define the field length.

Enter configuration

$+

Exit and save configuration

$-

or 4.) this is the last field (variable length)

HG2

and Field 1 Terminators
no field terminators

HH0

1 field terminator

HH1

2 field terminators

HH2

Read the field terminator character(s) from the HEX table. Valid range of characters for all readers = 00 to FE.

Define Field 2 by
either
1.) field separator

HG0

Read the field separator character from the HEX table. Range of characters = 00 to FE.

discard separator

0

include separator

1

or 2.) Match character

HG3

Read the match character from the HEX tabel. Range of characters= 00 bis FE

227735 2013-01

Enter configuration

$+

Exit and save configuration

$-

or 3.) Field length

HG1

Read two numbers in the range 01 to 99 to define the field length.

or 4.) this ist the last field (variable length)

HG2

and Field 2 Terminators
no field terminators

HH0

1 field terminator

HH1

2 field terminators

HH2

Read the field terminator character(s) from the HEX table. Valid range of characters for all readers = 00 to FE.

Define field 3 by
either
1.) Field separator

HG0

Read the field separator character from the HEX table. Range of characters = 00 bis FE

discard separator

0

include separator

1

Enter configuration

$+

Exit and save configuration

$-

or 2.) Match character

HG3

Read the match character from the HEX table.
Range of character = 00 bis FE

or 3.) Field length

HG1

Read two numbers in the range 01 to 99 to define the field length.

or 4.) this is the last field (variable length)

HG2

and Field 3 terminator
no field terminators

HH0

1 Field terminator

HH1

2 Field terminators

HH2

Read the field terminator character(s) from the HEX table. Valid range of characters for all readers = 00 to FE.

Define Field 4 by
either
1.) Field separator

HG0

Read the field separator character form the HEX table. Range of characters= 00 bis FE

227735 2013-01

Enter configuration

$+

Exit and save configuration

$-

discard separator

0

include separator

1

or 2.) Match character

HG3

Read the match character from the HEX table.
Range of the characters = 00 bis FE

or 3.) Field length

HG1

Read two numbers in the range 01 to 99 to define the field length.

or 4.) this is the last field (variable length)

HG2

and Field 4 terminators
no field terminators

HH0

1 Field terminator

HH1

2 Field terminatros

HH2

Read the field terminator character(s) from the HEX table. Valid range of characters for all readers = 00 to FE.

Enter configuration

$+

Exit and save configuration

$-

Define Field 5 by
either
1.) Field separator

HG0

Read the field separator character form the HEX table. Range of characters= 00 to FE.

discard separator

0

include separator

1

or 2.) Match character

HG3

Read the match character from the HEX tabel. Range of characters = 00 to FE

or 3.) Field length

HG1

Read two numbers in the range 01 to 99 to define field length.

or 4.) this is the last field (variable length)

HG2

and Field 5 terminators
no field terminators

HH0

Enter configuration

$+

Exit and save configuration

$-

1 Field terminator

HH1

2 Field terminators

HH2

Read the field terminator character(s) from the HEX table. Valid range of characters for all readers = 00 to FE.

Step 7 First additional Fixed Field

no fixed field

HI0

1 character fixed field

HI1

2 character fixed field

HI2

3 character fixed field

HI3

4 character fixed field

HI4

5 character fixed field

HI5

6 character fixed field

HI6

After selecting one of the Additional Fixed Field codes, read the corresponding character(s) from the HEX tabel. Range of characters = 00 bis FE

Example:
4 character fixed field

HI4

+ 4D + 41 + 49 + 4E = MAIN

Enter configuration

$+

Exit and save configuration

$-

Step 8 Second Additional Fixed Field

no fixed field

HJ0

1 character fixed field

HJ1

2 character fixed field

HJ2

3 character fixed field

HJ3

4 character fixed field

HJ4

5 character fixed field

HJ5

6 character fixed field

HJ6

Step 9 Field Transmission

Number of fields to transmit

HK

Read one number in the range 1 to 7 for the number of fields to transmit. Include only fields to be transmitted.

Field Order Transmission
Read the codes corresponding to the fields to transmit in the order in which they are to be transmitted. A field can be transmitted more than once. See example.

Field 1

1

Field 2

2

227735 2013-01

Enter configuration

$+

Exit and save configuration

$-

Field 3

3

Field 4

4

Field 5

5

additional field 1

6

additional field 2

7

Example:
The barcode is divided into 3 defined fields plus 1 additional fixed field.
Transmit in the order: Field 2, Additional Field 1, Field 1, Field 2.

HK + 4 + 2 + 6 +

1 + 2

Step 10 Standard Formatting

Do not apply Standard Formatting

HL0

Apply Standard Formatting

HL1

After performing Advanced Formatting on the barcode read, Standard Formatting (Headers, Code Length, Code ID, Terminators) can be applied to the message to be transmitted.

Step 11 End Format Definition

End Format 1 Definition

HM0

End Format 2 Definition

HM1

Enter configuration

$+

Exit and save configuration

$-

End Format 3 Definition

HM2

End Format 4 Definition

HM3

Enable Advanced Format

No Advanced Formats enabled (*)

HN0

Advanced Format 1 enable

HN11

Advanced Format 1 disable

HN10

Advanced Format 2 enable

HN21

Advanced Format 2 disable

HN20

Advanced Format 3 enable

HN31

Advanced Format 3 disable

HN30

Advanced Format 4 enable

HN41

Advanced Format 4 disable

HN40

No Match Result

This selection determines the action to be taken when codes read do not conform to the advanced format requisites (no match).

Enter configuration	Exit and save configuration
$+	$-

Clear data - no transmission	transmit data using standard format
H00	H01

Codes not matching can be ignored, cleared from memory not transmitted.
Codes not matching can be transmitted using the Standard formatting (Headers, Code Length, Code ID, Terminators).

4.15 Radio Parameters

Default Radio Parameters	
Parameters	**Default**
Radio Protocol timeout	2 seconds
Radio RX timeout	disabled
Power-off timeout	10 min., not changeable
Transmission mode	one way
Beeper control for radio response	normal
Single store	disabled
Batch mode	disabled
Find me	enabled

The Default value is signed with (*).

To change the default values

1. Read the "Enter Configuration" code once.
2. Read configuration codes from the desired groups or follow the procedure given for this code group.
3. When desired you can change further configuration codes directly.
4. Read the "Exit and Save Configuration" code once.

4.15.1 Radio Protocol timeout

Enter configuration

$+

Exit and save configuration

$-

Radio Protocol timeout

Select the code type from the code table in in the range 02 - 19.
Timeout from 2 to 19 seconds

Default 2 seconds (*)

RH

4.15.2 Radio RX timeout

Enter configuration

$+

Exit and save configuration

$-

Radio RX timeout

disable (*)

RR01

always on

RR00

specify timeout
Read 2 numbers in the range 05 - 99.
05 - 99 = Radio RX timeout range from 05 - 99 seconds

RR

227735 2013-01

4.15.3 Power-off timeout

Enter configuration

$+

Exit and save configuration

$-

Power-off timeout

Read 2 numbers in the range 00 - 99 ein.
00 = Power off disabled, reader always ready
01 - 99 = corresponds to max. 99 hours, delay before power-off

power-off after 4 hours (*)

RP

4.15.4 Transmission Mode

Enter configuration

$+

Exit and save configuration

$-

Transmission Mode

one-way (*)

RI0

two-way

RI1

4.15.5 Beeper Control for radio response

Enter configuration

$+

Exit and save configuration

$-

Beeper control for radio response

normal (*)

BF0

Only good decode

BF1

only good reception

BF2

off

BF3

4.15.6 Single store

Enter configuration

$+

Exit and save configuration

$-

Single store

disabled (*)

R00

1 attempt

R01

2 attempts

R02

3 attempts

R03

4 attempts

R04

5 attempts

R05

227735 2013-01

Enter configuration

$+

Exit and save configuration

$-

6 attempts

R06

7 attempts

R07

8 attempts

R08

9 attempts

R09

4.15.7 Batch Mode

Enter configuration

$+

Exit and save configuration

$-

Batch Mode

disabled (*)

BZ0

enable automatic batch

BZ2

enable normal batch

BZ1

The following batch management parameters are complete commands and do not require reading the "Enter and Exit configuration" codes.

start normal batch transmission

#+BFlush

Delete batch data

#+BReset

4.15.8 Find me

Enter configuration

$+

Exit and save configuration

$-

Find me

disabled

Bk0

enabled (*)

Bk1

4.16 Display Parameter

The Default value is signed with (*).

Default Display Parameters	
Parameters	**Default**
Contrast	normal
Font Size	small
Backlight	disabled
Display-off Timeout	after 8 seconds
Display Mode	local echo
Keypad	enabled (links '<', center '=', rechts '>')

To change the default values

1. Read the "Enter Configuration" code once.
2. Read configuration codes from the desired groups or follow the procedure given for this code group.
3. When desired you can change further configuration codes directly.
4. Read the "Exit and Save Configuration" code once.

4.16.1 Date and time

Enter configuration

$+

Exit and save configuration

$-

Date and time

Set date
Read 6 numbers for DDMMYY

IA

Set time
Read 4 numbers for HHMM

IB

227735 2013-01

4.16.2 Contrast

Enter configuration

$+

Exit and save configuration

$-

Contrast

Default: normal

lighter
Read the code until the desired contrast is reached.

IC0

darker
Read the code until the desired contrast is reached.

IC1

4.16.3 Font size

Enter configuration

$+

Exit and save configuration

$-

Font size

small (*)

ID0

medium

ID1

large

ID2

4.16.4 Backlight

Enter configuration

$+

Exit and save configuration

$-

Backlight

Backlight off (*)

IE0

Backlight on

IE1

4.16.5 Display-off-timeout

Enter configuration

$+

Exit and save configuration

$-

Display-off-timeout

Default: after 8 s off (*)
Display-off-timeout

IFa

Read 2 numbers in the range 00 - 99 (s).
00 = disables display timeout (always on)
01 to 99 timeout from 1 to 99 seconds.

4.16.6 Display Modus

Enter configuration

$+

Exit and save configuration

$-

Display Modus

normal

IG0

local echo (*)

IG1

Clear display after decode

IG2

227735 2013-01

4.16.7 Key Pad

Enter configuration

$+

Exit and save configuration

$-

Key Pad

enable reader keypad and select characters (*) and select characters

IK1

disabled reader Keypad

IK0

Read 3 HEX characters in the range
00 bis FE
FF = KeyID disabled
left = '<'
center = '='
right = '>

5 References

5.1 References serial interface

5.1.1 Handshaking XON/XOFF

During transmission between base station PSCAN-B and Host, if the Host sends the XOFF character (13 Hex) , the PSCAN-B interrupts the transmission with a maximum delay of one character and only resumes when the XON character (11 Hex) is received.

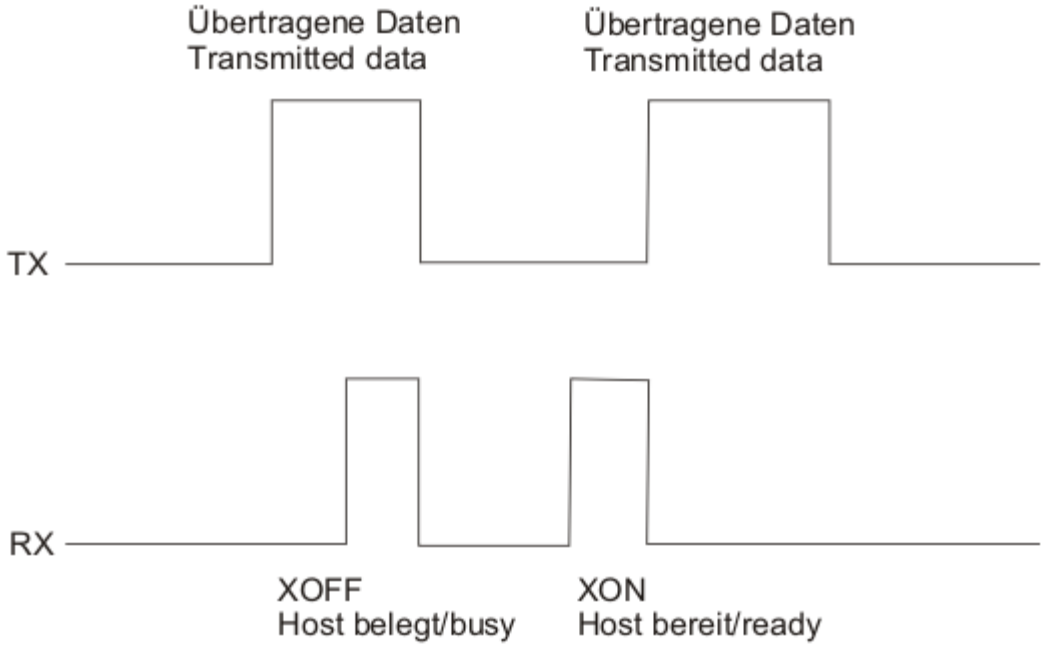

XON/XOFF Handshaking

5.1.2 Handshaking ACK/NAK

PSCAN-M

The transmission protocol takes place between handheld barcode reader, base station and Host. The handheld barcode reader passes his data (code read) the the base station which sends it to the Host. The management of responses (from Host or base station) depends on the Transmission Mode parameter.
In the following descriptions the completed transmission is indicated by the "beeper control Radio Response" parameter with its default setting to Normal.
When ACK/NAK is disabled (in One-Way tx mode), there is no control from base station to Host transmission, the handheld barcode reader responds with the good reception tone.

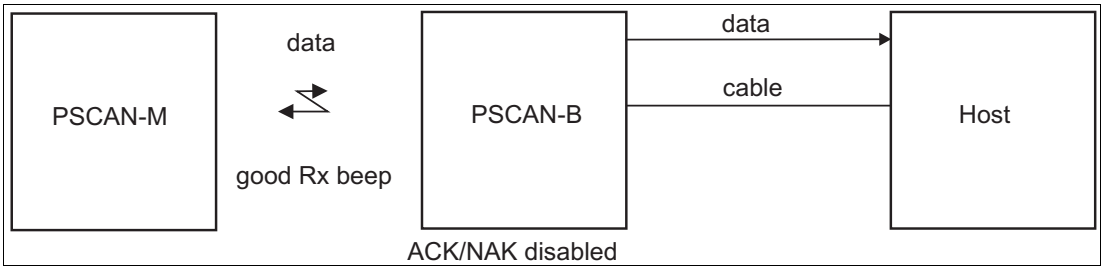

Figure 5.1 Transmission = One-way

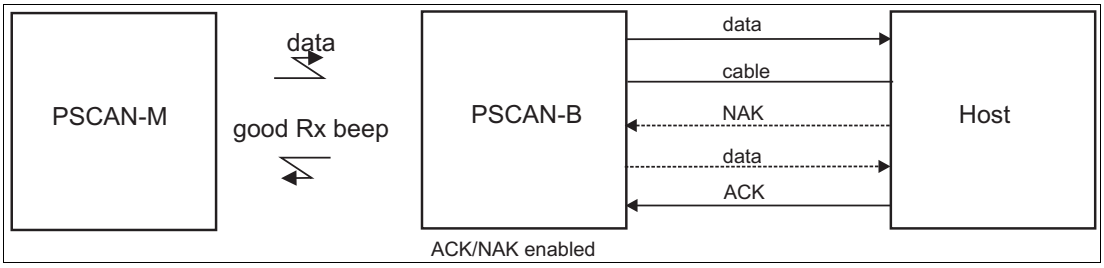

Figure 5.2 Transmission = Two-ways

When ACK/NAK is enabled (in Two-Ways tx mode), the Host sends an ACK character (06 HEX) in the case of good reception or the NAK character (15 HEX), requesting re-transmission, in the case of bad reception. Only after the ACK character is received by the PSCAN-B does the reader respond with the good reception tone.
If the PSCAN-B does not receive an ACK or NAK, transmission is ended after the RX Timeout. See also Radio Protocol Timeout.

5.1.3 FIFO

If enabled the PSCAN-B collects all messages sent by PSCAN-M and sends them in order of acquisition to the connected Host.
If disabled, PSCAN-M blocks message transmission until the PSCAN-B has completed transmission towards the Host.

5.1.4 RX Timeout

When the serial interface is selected, the Host can be used to configure the device by sending it command strings.
This parameter can be used to automatically end data reception from the Host after the specified period of time.
If no character is received from the Host, after the timeout expires, any incomplete string (any string not terminated by <CR>) is flushed from the device buffer.

5.2 References Data Format

For an overview of Message Formatting see chapter 6

5.2.1 Header / Terminator section

The header/terminator selection is not effected by reading of the restore default code.

5.2.2 Reader / base station Address Stamping

It is possible to include the reader and base station addresses in the message sent to the host. The reader Address Stamping and the base station Address Stamping parameters consist of a 4-digit number n the range 0000 to 1999.

5.2.3 Reader / base station Address Delimiter

The Address Delimiter allows a character to be included to separate the reader and base station Address Stamping fields from the next fields in the message. Any character can be included in the hexadecimal range from 00 to FE.

5.2.4 Time Stamping Format

The Time Stamping Parameter sets the format for hour and date information. It consists of 1 or 2 groups of numbers, each one made up of 6 decimal digits.
For example:
Setting the Hour / Minutes / Seconds / Month / Day / Year format, the information 17:03:16 on June 12, 2002 will be formated as: **170316120602**.

5.2.5 Time Stamping Delimiter

The Time Stamping Delimiter allows a character to be included to separate the Time Stamping field from the next field in the message. Any character can be included in the hexadecimal range from 00 to FE.

5.3 References Power Save

Sleep State

For PSCAN-M series handheld barcode reader, sleep state is entered immediately after reading a code and is not configurable. To exit Sleep mode press the trigger.

5.4 References Reading Parameter

5.4.1 Trigger Signal

This mode determines how the reading phase is controlled when the hardware trigger operating mode is selected:

- Trigger active level: the reader goes (ON), when the trigger is pressed and goes OFF when it is released.
- Trigger active pulse: the reader goes (ON), at the first trigger press and goes (OFF), only at a second press.

5.4.2 Trigger Click

When enabled, it activates a "click" sound upon each trigger pressure.

5.4.3 Trigger-Off Timeout

When this timeout is selected, the reader turns OFF automatically after the desired period of time.

5.4.4 Reads per cycle

Reads per Cycle

A reading cycle depends on the trigger signal selection and on the trigger timeout selection. When one read per cycle is selected, the handheld barcode reader turns off as soon as a vaid code is decoded. To turn the handheld barcode reader on again, release and again press the trigger in case the handheld barcode reader is operating in "trigger level mode", pull the trigger if the handheld barcode reader is operating in "trigger pulse mode".
When multiple reads per cycle is selected, the handheld barcode reader turns off after a good decoding for the time necessary to transmit the code and activate the beeper, then it turns on again. The handheld barcode reader turns off after a trigger press according to the "trigger signal" selection or when the timeout expires.
The safety Time parameter can be used in this case to avoid unwanted multiple reading of the same code, see safety time below.

5.4.5 Safety Time

Safety time prevents the device from immediately decoding the same code more than once. Same code consecutive reading can be disabled requiring the handheld barcode reader to remove from the code (no decoding) for at least 400 ms, or a timeout can be set up to 9.9 seconds before the decoder will accept the same code. Reading is immediately if the code changes.

5.5 References Decoding parameters

Caution!

Malfunciton of the handheld barcode reader

With changing this parameters the reading performance can be degraded or increase the possibility of a decoding error.

These parameters must be absolutely correctly adjusted.

5.5.1 Ink-Spread

The ink-spread parameter allows the decoding of codes, which are not perfectly printed because the page texture tends to absorb the ink.

5.5.2 Overflow Control

The overflow control parameter can be disabled when decoding codes printed on small surfaces, which do not allow the use of an overflow space. This command does not affect code families 2/5, Code 128 and Code 93.

5.5.3 Interdigit Control

The interdigit control parameter verifies the interdigit spacing for code families Code 39 and Codabar.

5.6 References Advanced Formatting

Match Conditions

Selecting an Advanced Formatting and specifying a Match restriction (Code Type, Code length, Predefined Characters) the code will be transmitted according to the order of the defined formats.

For example, defining 2 formats where:

- Format 1: Match Code Typ = Code 128
- Format 2: Match Code length = 15 and Match with predefined Characters "DATA"

A Code 128 "DATA:12345ABCDE with Code length 15 will be formatted following the Format 1.

To send the same code with Format 2 it is necessary to invert the format order as follows:

- Format 1: Match Code length = 15 and Match with predefined Characters "DATA"
- Format 2: Match Code Typ = Code 128

5.7 References Radio Parameter

5.7.1 Radio Protocol Timeout

This parameter sets the valid time to wait before transmission between PSCAN-M and PSCAN-B is considered failed.

This parameter should be set taking into consideration the radio traffic. (numer of readers in the same area)

If the serial interface is used with ACK/NAK enabled, this parameter should be at least equal to the Rx timeout parameter for low traffic environments. It should be increased it there are many readers in the same area.

It can be set between 2 and 19 seconds.

5.7.2 Radio RX Timeout

When the handheld barcode reader is used in a standalone layout (point-to-point or with multiple handheld barcode readers) it can be configured to receive "asynchronous" messages from the host.

Enable "2 way" Communication Protocol - After the transmission of each barcode, the handheld barcode reader waits for an acknowledgement from the host. A message can be sent by the host accompanying this acknowledgement, or in place of it, to display something on the screen or executea command (such as sound a beep sequence, turn an LED on of off etc.) If no acknowledgement or message is received from the host within a programmable timeout duration, the radio will be switched off and an "error transmission beep will be sounded.
Independent of the Selected Protocol - The handheld barcode reader can be configured to keep the radio receiver "awake" for a defined period of time following each transmission. Any message coming from the host1 before expiration of the timeout is accepted. The parameter "Radio RX Timeout" is used for specifying how long the handheld barcode reader have to wait for a message after receiving each code transmission.
In this mode, the radio can also be "awakened" by pressing the trigger. The handheld barcode reader can receive a message only if it is linked to the Base (i. e. the handheld barcode reader has been joined to the Base and has had at last one "valid" transmission after the last power-on). Setting the "Radio RX timeout" value to "00" specifies that the radio never goes into sleep mode (always awake -- the handheld barcode reader can receive a message at any time)

5.7.3 Power-off Timeout

Note!

Power save

If the command is enabled, after the desired timeout in hours, the PSCAN-M batteries are disconnected and all power consumption ceases. To restore power, press the trigger once. The handheld barcode reader will now be ready to read codes.
Power-off does not affect configuration parameters.
The PSCAN-M handheld barcode reader has an integrated power-off timeout (independend of power-off timeout configruation) to spare the battery. After approx. 10 - 12 minutes not pressing the trigger the PSCAN-M will be completely switched off.

5.7.4 Transmission mode

This parameter determines whether the reader receives responses or messages form the Host or not. In One-Way tx mode, neither Host nor PSCAN-B responds the the PSCAN-M.

In Two-Way tx mode, the reader must receive a response from either the PSCAN-B or the Host. The PSCAN-B responds (empty message) to the reader, only after good transmission to the Host, for the following conditions: ACK / NAK enabled For these conditions, it is suggested to prolong the Radio Protocol Timeout.

Enabling Two-Way tx mode temporarily disables FIFO buffering.

With ACK / NAK disabled, the Host responds to the reader (through PSCAN-B) with an answer message (message to reader display or command to reader), see the following figure.

Transmission mode = Two-Ways

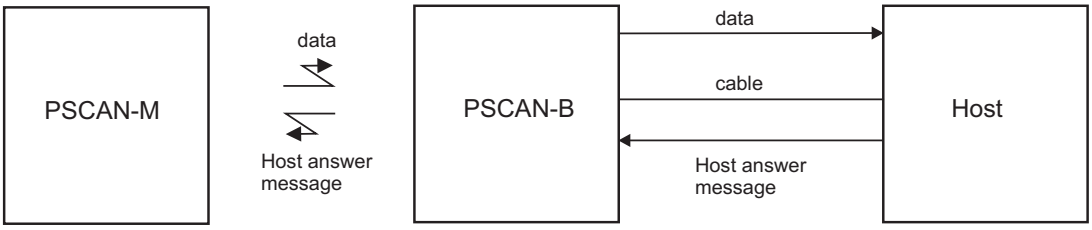

5.7.5 Beeper control for radio response

For the PSCAN-M the data entry good read tone normally results in two beeps; the first indicates that the reader has decoded the code, the second indicates whether PSCAN-B has received the data.

This can be changed according to the following selections:

- Normal: Both good decode and good receptions are signaled (two beeps).
- Only good decode: Only the first beep indicating a good read is signaled.
- Only good reception: Only the second beep indicating a good reception is signaled.
- Off: Neither good read nor good reception beeps are signaled.

For all configurations, any transmission errors will always be signaled.

5.7.6 Single store

When single store mode is enabled, if the PSCAN-M fails to transmit a code to the PSCAN-B , it enters a special operating mode that prevents the user form reading barcodes. When such operating mode is entered , the trigger no longer enables barcode reading but is used to retry transmission itself for the number of attempts selected in configuration. Once the transmission is successful the reader returns to standard mode. If transmission is not successful after the number of configured attempts, the code is discarded.
Single Store may be useful if you often read codes at the limit of the coverage area and there is a chance that code transmission can fail. In such case single store allows you to move to a more favorable position or location (i.e. closer to the PSCAN-B) and retry transmission without the necessity of re-reading the code since it is already stored in the reader.
Conversely, if single store is disabled, and the user wants to retry transmission, the code must be read again, and therefore the attempt must be made from basically the same location. If the user gives up, he does not know if the transaction was successful. (Actually the transmission could have been successful but the PSCAN-B may have been unable to acknowledge the message). There are applications in which there is no risk of transmission failure. In such cases it may be better to disable single store so that the user perceives a more consistent behavior of the trigger in that it always corresponds to code reading.

5.7.7 Batch mode

This operating mode allows storing read codes in the internal reader RAM memory. The stored codes are transmitted to the PSCAN-B at a later time according to the type of batch mode selected.
Batch mode can be enabled either manually (normal batch mode) or automatically.
Normal batch mode temporarily suspends radio communication between PSCAN-M and PSCAN-B allowing codes to be stored in the reader on a FIFO basis. This can be useful for example, if codes must be read from a location where there is no radion network.Upon returning to the system working area , this mode requires reading the **Start Normal Batch Transmission** barcode to successively transmit the list of stored codes to the PSCAN-B. The FIFO management assures that the first code read will be the first code to be transmitted to the PSCAN-B.
The **Delete Batch Data** barcode allows canceling all barcode data stored in the reader.
Automatic batch mode allows codes to be stored in the reader on a FIFO basis whenever the reader is out of radio range. In this case radio communication is not suspended and transmission is attempted after each code read. If transmission cannot be successfully completed then the code is added to the list. When the reader returns in range, transmission of the codes to the base station resumes automatically, according to the selected communication protocol, upon simply pressing and releasing the trigger or by successfully reading a new code.
Each code is listed on the reader display togehter with its identifying position number and its total number of characters. The three keys under the display have the following function in batch mode:

Designation of the key	Key	Function
(arrow to the top)	(left key)	Scroll up in list
ENTER	(center key)	Delete highlighted code
(arrow down)	(right key)	Scroll down in list

In batch mode, the selected Transmission mode determines the behavior of the reader at the time the list of codes is transmitted. If One-way mode is enabled , the codes are transmitted one after the other without interruption. In Two-Way mode, after transmitting each code, the reader waits for the Host answer message to be shown on the display. Therefore, in Two-way transmission mode and normal batch mode, the **Start Normal Batch Transmission** barcode must be read after each code to continue, whereas with automatic batch mode just pull and release the trigger after each code.
The code, which has a transmission pending, is shown on the display in reserve video indicating that it cannot be deleted.

5.7.8 Find me

If enabled, after a timeout of a few minutes in which PSCAN-M is not used, it enters stand-by mode and its green LED starts blinking in order to signal its location.

5.8 References Display Parameters

Display Mode

The user can control the reader display behavior according to the following selections:

Normal mode: When a barcode is read with the reader:

A code is sent to the Host.

The reader display is **not cleared.**. Therefore if any previous data was displayed on the reader screen it remains.

There is no Local Echo to the reader display.

Clear Display after Decode mode: When a barcode is read with the reader:

A code is sent to the Host.

The reader display **is cleared**. Therefore if any previous data was displayed on the reader screen it is cancelled and the screen remains blank.

There is no Local Echo to the reader display.

Local Echo mode: When a barcode is read with the reader:

A code is sent to the Host.

The reader display **is cleared.**.

The code is also sent to the reader display (Local Echo)

The cursor is positioned after the last printed character on the reader display.

Host messages sent to the gun are always written to the reader display.

5.9 Configuration editing commands

The following commands carry out their specific function and then exit the configuration environment.

Command	Description
$+$!	Transmit the PSCAN-M software release
$+$&	Transmit PSCAN-M reader configuration in ASCII format.

Command	Description
$+RX1$	Transmit the PSCAN-B software release.
$+RX2$	Transmit PSCAN-B base station configuration in ASCII format.

6 Message formatting

The system always provides PSCAN-M to host data communication using the following message formatting:

Output Message from PSCAN-M / PSCAN-D stand-alone zum Host [Header][Handheld barcode reader Adresse][Handheld barcode reader-Addr_delimiter][Base station_Addr][Base station_Addr_delimiter][Time stamp][Time stamp_delimiter][Code ID][Code length] **CODE** [Terminatior] [items in square brackets are optional]

For PSCAN-M models with display, if the serial interface is selected for communication between the Host and the PSCAN-B base station, then the following additional communications between host and handheld barcode reader can occur:

- The host can send messages to any handheld barcode reader associated with the base station to control the handheld barcode reader's display, LEDs and beeper
- The handheld barcode reader can send up to 3 user-defined characters to the host using the 3 command keys on the handheld barcode reader.

These communications and their relative message formatting are detailed in the following paragraphs.

6.1 Messages from Host to handheld barcode reader

The general format to enable the handheld barcode reader for 2 way communication is:
[handheld barcode reader_address][handheld barcode reader_address_delimiter]<Message>CR

Note!

- If you enabled the handheld barcode reader address stamping or the handheld barcode reader address delimiter, you **must** specify them in every message.
- If xou have not enabled the handheld barcode reader address stamping or the handheld barcode reader address Delimiter, you must not specify them. In this case all messages will be implicitly addressed to the "binded" handheld barcode reader of the base station directly connected to the serial line.
- Messages can not start with "$+" because they would be interpreted as a configuration command.
- You can send a message to the handheld barcode reader only while it is on. This happens when it has sent a message to the host and the radio timeout has not yet expired.(command "Radio Protocol Timeout")
- If you want to control the handheld barcode reader's beeper from host, you will also probably want to disable the good transmission beep that is emitted when the code is received from the base station.

The message field can store plain text and escape sequences.

- Escape sequences are interpreted as commands.
- Plain text is directly printed on the display. If writing beyond the end of line, the display does not wrap automatically. Extra characters are ignored. Control characters are not interpreted.(i.e.LF, FF, etc.)

6.1.1 Cursor Control

ESC[n A	Up n rows, no scroll
ESC[n B	Down n rows, no scroll
ESC[n C	Right n columns
ESC[n D	Left n columns
ESC[G	CR
ESC[r;cH	Move to row r, column c, ESC[1;1H is the upper left character position of the display)
ESC D	Down 1 row, with scroll
ESC E	CR and cursor down 1 row with scroll
ESC M	Up 1 row and scroll

Note!

- Since <CR> is used as the message terminator, you must use ESC [G oder ESC E to print a CR.
- The cursor row position **is not** affected by the currently selected front. The display always has 4 rows, so when writing with the large font, actually two rows are written to: the current one and the one below it. You will need **two**ESC E commands to step from one row to the next when using the large font.
- The cursor column posistion**is** affected by the currently selected font. Therefore,**column 6** is 36 pixels from the left border only if you last selected the 6x8 font; otherwise it could be 48 or 72 pixels from the left border.

6.1.2 Font Selection

ESC [0 m	Normal mode
ESC [7 m	Reverse mode
ESC # 4	Large font: subsequent characters are written on the current row and the row below it using the 12x16 font which allows for two of eight characters on the display.
ESC # 5	Normal font: subsequent characters are written using the 6x8 font which allows for four rows of sixteen characters on the display.
ESC # 7	Medium font: subsequent characters are written using 8x8 font which allows for four rows of twelfe characters on the display.

6.1.3 Clearing Display

ESC [0 K	From cursor position to end of line inclusive
ESC [1 K	From beginning of line to cursor position (not inclusive)
ESC [2 K	Entire line
ESC [0 J	From cursor position to end of display inclusive
ESC [1 J	From beginning of display to cursor position (not inclusive)
ESC [2 J	Entire display, moves cursor to upper left corner on display

6.1.4 LED and Beeper Control

ESC [0 q	Emit short High tone + short delay
ESC [1 q	Emit short Low tone + short delay
ESC [2 q	Emit long Low tone + short delay
ESC [3 q	Emit good read tone
ESC [4 q	Emit bad tx tone
ESC [5 q	Wait 100 ms
ESC [6 q	Turn on the green LED
ESC [7 q	Turn off the green LED
ESC [8 q	Turn on red LED
ESC [9 q	Turn off red LED

The LED control escape sequences are intended to activate the LEDs for **short periods** of time and can be used in combination with the beeper. The LED and beeper will be controlled by the system after the entire command sequence is interpreted.

Example	
ESC [6 ESC [3 q ESC [7 q	Turns on the green LED, emits a good read tone, and turns off the green LED.
ESC [6 ESC [5 q ESC [7 q	Turns on the green LED for 100 ms and then turns off the green LED.

6.1.5 Setting RTC

ESC [0 p T T M M J J	Set date to day, month, year.
ESC [1 p H H M M	Set time to hours, minutes, seconds are automatically set to 00.

6.2 Messages from handheld barcode reader command keys

The handheld barcode reader PSCAN-M with display have three command keys that can each be associated with a character to send to the host.
By pressing the key on the handheld barcode reader, the associated character with its relative message formatting is sent to the host. For example, keys can be used to select items from a menu sent to the handheld barcode reader display by the application program.

The general format is:

[Header][Handheld barcode reader_address[Handheld barcode reader_address_delemiter][Base station_address][Base station_address_delemiter][Time stamp][Time stamp_delemiter][Code-ID][Code length]KEY ID[Terminator]

[items in square brackets are optional]

The messages are handled by the system as if they were barcodes, that's why KeyID can have so many fields appended to it. If in your application there is some chance of reading a 1 char barcode identical to KeyID, the way you can distinguish between the two is to enable the code ID: The KeyID is the only 1-character long EAN 8 code.

The default characters associated with each key (keyID) are shown in the following table:

Default Key Identifiers		
	Key	KeyID
▲	(left) Key	‘<’
Enter	(center) Key	‘=’
▼	(right) Key	‘>’

Figure 6.1 Default key Identifiers

7 Codes and Character Sets

7.1 Single codes

- To enter numerical values, scan successively the digits 0-9.
- Read alphanumeric values by scanning their hex values. I.E. 'L' (hexadecimal value: 4C): first scan '4' then 'C'.

0	1	2
3	4	5
6	7	8
9	A	B
C	D	E
F	G	H
I	J	K
L	M	N
O	P	Q

R	S	T
U	V	W
X	Y	Z

7.2 Code Identifier Table

2/5 Interleaved

N

2/5 Industrial

P

2/% normal 5 bars

O

2/5 matrix 3 bars

Q

EAN 8

A

EAN 13

B

UPC A

C

UPC E

D

EAN 8 mit 2 ADD ON

J

EAN 8 mit 5 ADD ON

K

EAN 13 mit 2 ADD ON

L

EAN 13 mit 5 ADD ON

M

227735 2013-01

UPC A mit 2 ADD ON

F

UPC A mit 5 ADD ON

G

UPC E mit 2 ADD ON

H

UPC E mit 5 ADD ON

I

Code 39

V

Code 39 Full ASCII

W

Codabar

R

ABC Codabar

S

Code 128

T

EAN 128

k

Code 93

U

CIP/39

Y

CIP/HR

e

Code 32

X

ISBT 128

f

MSI

Z

Code 16K

p

Code 11

b

Code 49

q

GS1 Databar Expanded Linear and Stacked

t

GS1 Databar Limited

v

GS1 Databar 14 Linear and Stacked

u

7.3 Configuration Codes

Enter configuration

$+

Exit and save configuration

$-

Abort current setting

$%

Cancel all current settings (without exit)

$/

Send Firmware Version

$+$!

Restore Default

$+$*

227735 2013-01

7.4 Character Sets / Character Codes

Decimal	Hexa-decimal	Character	Decimal	Hexa-decimal	Character	Decimal	Hexa-decimal	Character
32	20 h	SPACE	64	40 h	@	96	60 h	`
33	21 h	!	65	41 h	A	97	61 h	a
34	22 h	"	66	42 h	B	98	62 h	b
35	23 h	#	67	43 h	C	99	63 h	c
36	24 h	$	68	44 h	D	100	64 h	d
37	25 h	%	69	45 h	E	101	65 h	e
38	26 h	&	70	46 h	F	102	66 h	f
39	27 h	'	71	47 h	G	103	67 h	g
40	28 h	(	72	48 h	H	104	68 h	h
41	29 h	)	73	49 h	I	105	69 h	i
42	2A h	*	74	4A h	J	106	6A h	j
43	2B h	+	75	4B h	K	107	6B h	k
44	2C h	,	76	4C h	L	108	6C h	l
45	2D h	-	77	4D h	M	109	6D h	m
46	2E h	.	78	4E h	N	110	6E h	n
47	2F h	/	79	4F h	O	111	6F h	o
48	30 h	0	80	50 h	P	112	70 h	p
49	31 h	1	81	51 h	Q	113	71 h	q
50	32 h	2	82	52 h	R	114	72 h	r
51	33 h	3	83	53 h	S	115	73 h	s
52	34 h	4	84	54 h	T	116	74 h	t
53	35 h	5	85	55 h	U	117	75 h	u
54	36 h	6	86	56 h	V	118	76 h	v
55	37 h	7	87	57 h	W	119	77 h	w
56	38 h	8	88	58 h	X	120	78 h	x
57	39 h	9	89	59 h	Y	121	79 h	y
58	3A h	:	90	5A h	Z	122	7A h	z
59	3B h	;	91	5B h	[	123	7B h	{
60	3C h	<	92	5C h	\	124	7C h	|
61	3D h	=	93	5D h	]	125	7D h	}
62	3E h	>	94	5E h	^	126	7E h	~
63	3F h	?	95	5F h	_	127	7F h	DEL

ASCII control characters

Decimal	Hexadecimal	Character	Meaning of the most important Control characters
0	00 h	NUL	without effect
1	01 h	SOH	Start of header
2	02 h	STX	Start of text
3	03 h	ETX	End of text
4	04 h	EOT	End of transmission
5	05 h	ENQ	Enquiry
6	06 h	ACK	Acknowledge
7	07 h	BEL	Bell
8	08 h	BS	Back space
9	09 h	HT	Horizontal tabulating
10	0A h	LF	Line feed
11	0B h	VT	Vertical tabulating
12	0C h	FF	Form Feed Formularverschub
13	0D h	CR	Carriage Return
14	0E h	SO	SHIFT out, Dauerumschaltungszeichen
15	0F h	SI	SHIFT in
16	10 h	DLE	Data link escape
17	11 h	DC1	XON
18	12 h	DC2	
19	13 h	DC3	XOFF
20	14 h	DC4	
21	15 h	NAK	Negative acknowledge
22	16 h	SYN	Sync character
23	17 h	ETB	End of transmission block
24	18 h	CAN	Cancel
25	19 h	EM	End of Medium
26	1A h	SUB	Substitute
27	1B h	ESC	ESCAPE
28	1C h	FS	FIELD separator
29	1D h	GS	Group separator
30	1E h	RS	Record separator
31	1F h	US	Until separator, Space

8 Maintenance and repair

8.1 Repair

The devices must not be repaired, changed or manipulated.
Please contact your local Pepperl+Fuchs sales representative for further instructions.

9 PSCAN-M / PSCAN-B / PSCAN-C NON-Ex

PSCAN-M (NON-Ex)

Order designation	Order number	Description
POWERSCAN M8300/D 433 MHz	223000	Wireless handheld barcode reader PSCAN-M (NON-Ex) Data sheet refere to company Datalogic

PSCAN-B (NON-Ex) housing stainless steel

Order designation	Order number	Description
PSCAN-B-NO-EU-R2-A-10-N	235667	Base station PSCAN-B (NON-Ex) housing stainless steel with male receptacle 8-pin (M12) included in scope of supply field attachable connector M12 (8-pin)
Accessory		
PG12-10855	country specific connection	Power supply for base station PSCAN-B (stainless steel) NON Ex area 100 - 240 V AC, 50 - 60 Hz, 0,4 A
DATL-A4-0.50-4	236593	Extension cable to PSCAN-B stainless steel cable 8-pin cable male connector M12, 8-pin --- cable female connector M12, 8-pin
CBL-PSCAN-B-NEX-RS232	236592	Cable female connector M12, 8-polig --- DSUB9 cable male connector Extension cable -- PC/ PLC / Profibus / Modbus
SPARE-PSCAN-PLUG-TERM	221979	Connecting cable TERM --- PSCAN-B (NON-Ex, stainless steel housing)

Technical data PSCAN-B-NO-EU-R2-A-10-N

Base station PSCAN-B-NO-EU-R2-A-10-N	
General specifications	
Radio distance (in open air)	max. 50 m
Electrical specifications	
Operating voltage	9 ... 28 V , typ. 12 V
Current consumption	200 mA
Interface	RS 232
Directive conformity	
Electromagnetic compatibility	
R&TTE Directive 1995/5/EC	ETSI EN 301489-1-V1.8.1:2008
Ambient conditions	
Operating temperature	-10 ... 50 °C (14 ... 122 °F)
Storage temperature	-20 ... 60 °C (-4 ... 140 °F)
Relative humidity	90 % , noncondensing
Mechanical specifications	

227735 2013-01

Base station PSCAN-B-NO-EU-R2-A-10-N	
Protection degree	IP54
Mass	340 g
Dimensions	271 mm x 128 mm x 80 mm
Height antenna	107 mm

PSCAN-B/C (NON-Ex) plastic housing

Order destination	Order number	Description
PSCAN-B-GP-EU-IN-P-10-N	235108	Base station + charger (one device) PSCAN-B (NON-Ex), PSCAN-C (NON-Ex) plastic housing with connection plug RJ45 Data sheet refere to company Datalogic
Accessory		
PG12-10855	country specific connection	Power supply for charger PSCAN-C NON Ex area 100 - 240 V AC, 50 - 60 Hz, 0,4 A
DATL-PSCAN-CAB-433-RS232	236468	PSCAN-B/C plastic housing cable RJ45 --- DSUB9 (RS232)
DATL-PSCAN-CAB-438-USB	236469	PSCAN-B/C plastic housing cable RJ45 --- USB
DATL-PSCAN-CAB-436-PS2	236470	PSCAN-B/C cable RJ45 --- PS2

Information to base station PSCAN-B NON-Ex (PSCAN-B-NO-EU-IN-P-10-N)

The base station PSCAN-B NON EX is initialized from Pepperl+Fuchs as follows:

Address base station	0101
Interface	USB-KBD

You can identify the base station from Pepperl+Fuchs at the fixed type plate.

1. Join the PSCAN-M radio barcode reader (or the NON Ex radio barcode reader from Datalogic) to the base station reading this code.

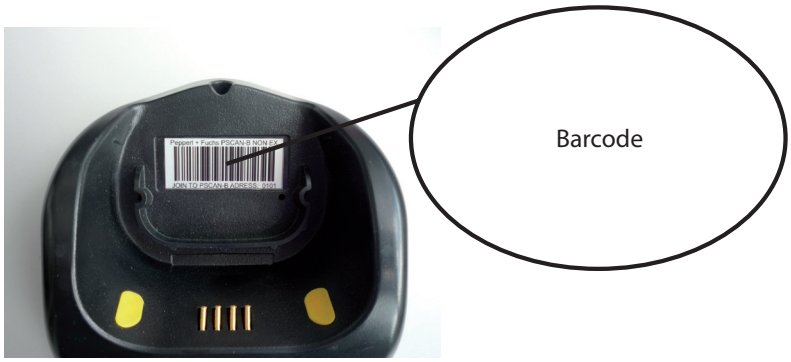

2. After joining you can configure the base station with the help of the barcode reader or the interface. Here you can change for example the kind of interface (for example RS232).

10 Appendix

10.1 Type code wireless barcode system

Type code PSCAN-M (wireless handheld barcode reader)

Model number	Description
PSCAN-M-1V-F2-EU-10-N	Wireless handheld barcode reader with display ATEX II 2G, Ex ib [op is] IIB T4 Gb ATEX II 2D, Ex ib [op is] IIIB T135°C Db 433 MHz Version 1.0

Type code PSCAN-B (Base station)

Model number	Description
PSCAN-B-C2-EU-05-A-10-N	Base station ATEX II 2G Ex ib IIB T4 Gb 433 MHz Interface 5 mA (for TERMEX) Version 1.0
PSCAN-B-F2-EU-05-A-10-N	Base station ATEX II 2G Ex ib IIB T4 Gb ATEX II 2D Ex ib IIIB T135°C Db 433 MHz Interface 5 mA (for TERMEX) Version 1.0
PSCAN-B-C2-EU-20-A-10-N	Base station ATEX II 2G Ex ib IIB T4 Gb 433 MHz Interface 20 mA (for stand-alone, VisuNet EX1) Version 1.0
PSCAN-B-F2-EU-20-A-10-N	Base station ATEX II 2G Ex ib IIB T4 Gb ATEX II 2D Ex ib IIIB T135°C Db 433 MHz Interface 20 mA (for stand-alone, VisuNet EX1) Version 1.0

Type code PSCAN-C (Charger)

Model number	Description
PSCAN-C-10-N	Charger Only for use in safe area Version 1.0 No options
Accessories	
PG12-10855	Power supply for charger Only for use in safe area 100 - 240 V AC, 50 - 60 Hz, 0,4 A

10.2 Exchange radio base station EXOM-DRAGON (old) with PSCAN-B

If you want to replace the base station EXOM-DRAGON (old) with a base station PSCAN-B you need the following adapter cable:

Accessory	Order designation	Order number
Adapter cable female connector 5-pin --- male connector 4-pin	ADAPTERCABLE-EXOM-PSCAN-B-10	240197

10.3 Software for configuration called "Aladdin" download from the homepage Datalogic.com

The software for configuration "Aladdin" can be very useful for the following applications:

- No radio communication between handheld barcode reader (PSCAN-M) and base station (PSCAN-B)
- Serial interface settings of the base station are unknown.
  It is not possible to contact the base station neither with the handheld barcode reader nor with the terminal program.

Download and install "Aladdin", software for configuration

Go to the hompage Datalogic S.p.A. (www.scanning.datalogic.com/) and download the configuration program then install the program on the associated PC.

Searching base station

1. Connect the ENT-DC-30-* (an dem die Basisstation PSCAN-B angeschlossen ist) and the serial interface of the PC with the cable S-ENT/PC-9.
2. Start the software for configuration "Aladdin"

   Then you'll see:

Figure 10.1 Aladdin "Search for one device"

3. Choose "Search for one device" aus.
   Aladdin is seraching the base station and is testing different serial settings.
4. The base station is found you see the following:

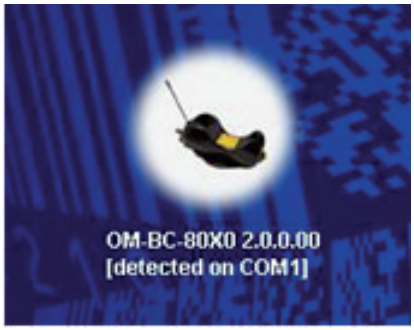

Figure 10.2 Aladdin "Basisstation found"

5. Is the base station **not** found you see:

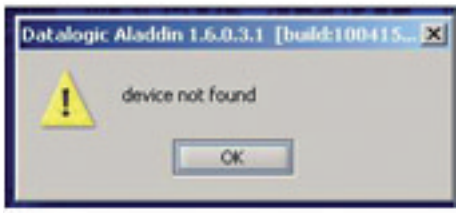

Figure 10.3 Aladdin "Base station not found"

The possible reasons for a not found base station are:

- COM interfaces at the PC not available respectively faulty
- COM interfaces at the PC engaged from programs
- Wiring problem between PC and base station

Configuring the base station

1. Double click on this icon.

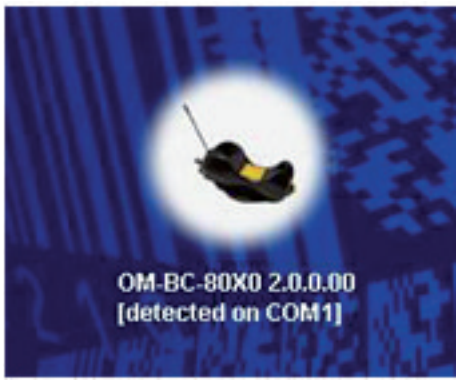

2. Choose under interface selection "RS232 Parameters".

3. Click "Read Configuration".

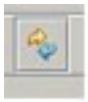

Now the interface data of the base station are displayed. They are visible behind Baud Rate, Parity Databits and Stop Bits.

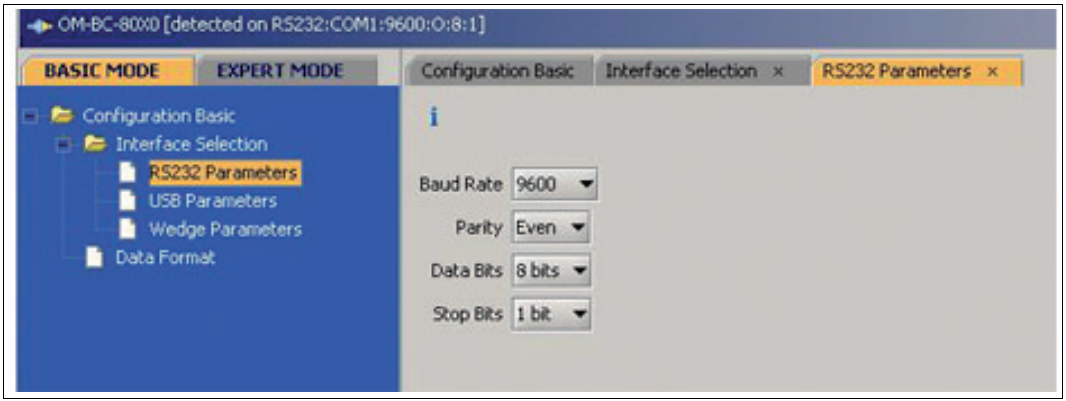

4. To change the address of the base station the following steps are necessary:
   Change into "EXPERT MODE" and click "Network".

   Then you'll see

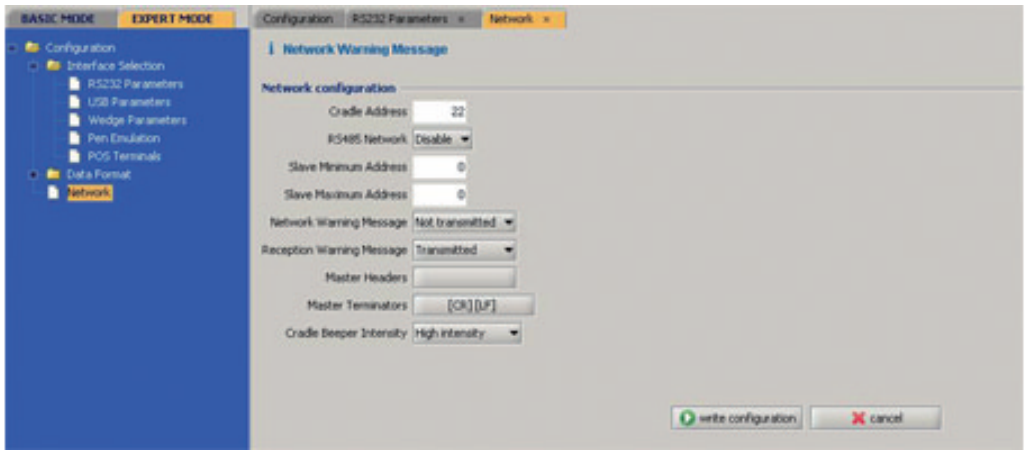

5. Change now the address of the base station under "Cradle Address" and save the inputs under "write configuration".

227735 2013-01

10.4 Approvals Wireless Barcode reader system

Declaration of Conformity Pepperl+Fuchs

EC-Type Examination Certificate BVS 10 ATEX E 146

EG-Konformitätserklärung / EC Declaration of Conformity

Nach EN ISO/IEC 17050-1 / in accordance with EN ISO/IEC 17050-1

EG-Konformitätserklärung / *EC Declaration of Conformity* PF11CERT1851

Die Pepperl+Fuchs GmbH, Lilienthalstraße 200, 68307 Mannheim, Deutschland erklärt hiermit in alleiniger Verantwortung, dass die in der Anlage gelisteten Produkte den genannten Europäischen Richtlinien durch Anwendung harmonisierter Normen entsprechen.

The Pepperl+Fuchs GmbH, Lilienthalstrasse 200, 68307 Mannheim, Germany hereby declares in sole responsibility that the products mentioned in the Annex conform to the listed European Directives by the application of harmonized standards.

Qualitätsmanagement ISO 9001:2008

Reg. Nr. 000760 QM08

Richtlinie(n): *Directive(s)*
94/9/EC (ATEX)
1999/5/EG (R&TTE)

Benannte Stelle: *Notified Body*
Physikalisch Technische Bundesanstalt
PTB

Kennnummer: *ID*
0102

Harmonisierte Normen / *Harmonized Standards*:

EN 60079-0:2009
EN 60079-11:2007
EN 60079-28:2007

ETSI EN 301489-1-V1.8.1:2008

Sonstige Normen / *Supplemental Standards*:

n/a

Ort / Location: Mannheim
Datum / Date 2011-04-26

Hersteller Unterschrift:
Signature of manufacturer:

Dr. Adolphs

Dr. Kegel

Funktion des Unterzeichners:
Function of the signer:

Geschäftsführer
CTO

Vorsitzender der Geschäftsleitung
CEO

PEPPERL+FUCHS

Anlage zur EG-Konformitätserklärung / Annex to EC-Declaration of Conformity PF11CERT1851

Type	Article-ID	Certificate	Description
PSCAN-B-C2-EU-05-A-10-N	230256	BVS 10 ATEX E 146	Base station
PSCAN-B-C2-EU-20-A-10-N	230258	BVS 10 ATEX E 146	Base station
PSCAN-M-1V-C2-EU-10-N	230257	BVS 10 ATEX E 146	Barcode reader

PEPPERL+FUCHS

(1) # EG-Baumusterprüfbescheinigung

(2) **- Richtlinie 94/9/EG -**
Geräte und Schutzsysteme zur bestimmungsgemäßen Verwendung in explosionsgefährdeten Bereichen

(3) ## BVS 10 ATEX E 146

(4) **Gerät:** **Barcodeleser Typ PSCAN-M-1*-*2* und Basisstation Typ PSCAN-B-1-*2***

(5) **Hersteller:** **Pepperl + Fuchs GmbH**

(6) **Anschrift:** **68307 Mannheim**

(7) Die Bauart dieses Gerätes sowie die verschiedenen zulässigen Ausführungen sind in der Anlage zu dieser Baumusterprüfbescheinigung festgelegt.

(8) Die Zertifizierungsstelle der DEKRA EXAM GmbH, benannte Stelle Nr. 0158 gemäß Artikel 9 der Richtlinie 94/9/EG des Europäischen Parlaments und des Rates vom 23. März 1994, bescheinigt, dass das Gerät die grundlegenden Sicherheits- und Gesundheitsanforderungen für die Konzeption und den Bau von Geräten und Schutzsystemen zur bestimmungsgemäßen Verwendung in explosionsgefährdeten Bereichen gemäß Anhang II der Richtlinie erfüllt.
Die Ergebnisse der Prüfung sind in dem Prüfprotokoll BVS PP 10.2268 EG niedergelegt.

(9) Die grundlegenden Sicherheits- und Gesundheitsanforderungen werden erfüllt durch Übereinstimmung mit:

EN 60079-0:2009 Allgemeine Anforderungen
EN 60079-11:2007 Eigensicherheit ´i´
EN 60079-28:2007 Optische Strahlung

(10) Falls das Zeichen „X" hinter der Bescheinigungsnummer steht, wird in der Anlage zu dieser Bescheinigung auf besondere Bedingungen für die sichere Anwendung des Gerätes hingewiesen.

(11) Diese EG-Baumusterprüfbescheinigung bezieht sich nur auf die Konzeption und die Baumusterprüfung des beschriebenen Gerätes in Übereinstimmung mit der Richtlinie 94/9/EG.
Für Herstellung und Inverkehrbringen des Gerätes sind weitere Anforderungen der Richtlinie zu erfüllen, die nicht durch diese Bescheinigung abgedeckt sind.

(12) Die Kennzeichnung des Gerätes muss die folgenden Angaben enthalten:

II 2G Ex ib [op is] IIB T4 Gb für Barcodeleser
II 2G Ex ib IIB T4 Gb für Basisstation

DEKRA EXAM GmbH
Bochum, den 23. November 2010

Zertifizierungsstelle | Fachbereich

DEKRA EXAM GmbH Dinnendahlstraße 9 44809 Bochum Telefon 0234/3696-105 Telefax 0234/3696-110 E-mail zs-exam@dekra.com

(13) Anlage zur

(14) # EG-Baumusterprüfbescheinigung

BVS 10 ATEX E 146

(15) 15.1 Gegenstand und Typ

Barcodeleser Typ PSCAN-M-1*-*2* und Basisstation Typ PSCAN-B-1-*2*

Anstelle der *** werden in der vollständigen Benennung Buchstaben oder Ziffern für unterschiedliche Ausführungen des Gerätes eingefügt, die keine Auswirkung auf den Explosionsschutz haben.

15.2 Beschreibung

Der Barcodeleser dient in Verbindung mit der Basisstation in explosionsgefährdeten Bereichen zum Lesen von Barcode-Kennzeichnungen und zur Übertragung der gelesenen Daten.

15.3 Kenngrößen

15.3.1	Barcodeleser Typ PSCAN-M-1*-*2*					
15.3.1.1	Stromversorgungsbatterie					
	Batteriespannung		DC	4,5	V
	Ladespannung	Um	DC	8	V
15.3.1.2	Funkquelle				
	Sendefrequenz		433,92 oder 910		MHz
	Sendeleistung			≤ 1	W
15.3.1.3	Scanner				
	Lichtleistung			≤ 35	mW
15.3.1.4	Umgebungstemperaturbereich	Ta	-10 °C bis – +40 °C		
15.3.2	Basisstation Typ PSCAN-B-1-*2* PSCAN-B-1-*2*				
15.3.2.1	Anschl. KL1				
	Spannung	Ui	DC	9	V
	Stromstärke	Ii		400	mA
	Leistung	Pi		1,5	W
	Innere Kapazität	Ci	vernachlässigbar		
	Innere Induktivität	Li		10	µH
15.3.2.2	Funkquelle				
	Sendefrequenz		433,92 oder 910		MHz
	Sendeleistung			≤ 1	W
15.3.2.3	Umgebungstemperaturbereich	Ta	-10 °C bis +50 °C		

DEKRA EXAM GmbH Dinnendahlstraße 9 44809 Bochum Telefon 0234/3696-105 Telefax 0234/3696-110 E-mail zs-exam@dekra.com

(16) Prüfprotokoll

BVS PP 10.2268 EG, Stand 23.11.2010

(17) Besondere Bedingungen für die sichere Anwendung

Entfällt

DEKRA EXAM GmbH Dinnendahlstraße 9 44809 Bochum Telefon 0234/3696-105 Telefax 0234/3696-110 E-mail zs-exam@dekra.com

(1) # 1. Nachtrag zur EG-Baumusterprüfbescheinigung

(2) Geräte und Schutzsysteme zur bestimmungsgemäßen Verwendung in explosionsgefährdeten Bereichen - Richtlinie 94/9/EG
Ergänzung gemäß Anhang III Ziffer 6

(3) Nr. der EG-Baumusterprüfbescheinigung: **BVS 10 ATEX E 146**

(4) Gerät: **Barcodeleser Typ PSCAN-M-1*-*2* und Basisstation Typ PSCAN-B-*2***

(5) Hersteller: **PEPPERL + FUCHS GMBH**

(6) Anschrift: **68307 Mannheim**

(7) Die Bauart dieser Geräte sowie die verschiedenen zulässigen Ausführungen sind in der Anlage zu diesem Nachtrag festgelegt.

(8) Die Zertifizierungsstelle der DEKRA EXAM GmbH, benannte Stelle Nr. 0158 gemäß Artikel 9 der Richtlinie 94/9/EG des Europäischen Parlaments und des Rates vom 23. März 1994, bescheinigt, dass diese Geräte die grundlegenden Sicherheits- und Gesundheitsanforderungen für die Konzeption und den Bau von Geräten und Schutzsystemen zur bestimmungsgemäßen Verwendung in explosionsgefährdeten Bereichen gemäß Anhang II der Richtlinie erfüllen. Die Ergebnisse der Prüfung sind in dem Prüfprotokoll BVS PP 10.2268 EG niedergelegt.

(9) Die grundlegenden Sicherheits- und Gesundheitsanforderungen werden erfüllt durch Übereinstimmung mit

IEC 60079-0:2011 Allgemeine Anforderungen
EN 60079-11:2012 Eigensicherheit ´i´

(10) Falls das Zeichen "X" hinter der Bescheinigungsnummer steht, wird in der Anlage zu dieser Bescheinigung auf besondere Bedingungen für die sichere Anwendung des Gerätes hingewiesen.

(11) Dieser Nachtrag zur EG-Baumusterprüfbescheinigung bezieht sich nur auf die Konzeption und die Baumusterprüfung der beschriebenen Geräte in Übereinstimmung mit der Richtlinie 94/9/EG.
Für Herstellung und Inverkehrbringen der Geräte sind weitere Anforderungen der Richtlinie zu erfüllen, die nicht durch diese Bescheinigung abgedeckt sind.

(12) Die Kennzeichnung des Gerätes muss die folgenden Angaben enthalten:

II 2G Ex ib [op is] IIB T4 Gb	für Barcodeleser
II 2D Ex ib [op is] IIIB T135°C Db	Zusätzlich für Typ PSCAN-M-1*-F2*
II 2G Ex ib IIB T4 Gb	für Basisstation
II 2D Ex ib IIIB T135°C Db	Zusätzlich für Typ PSCAN-B-F2*

DEKRA EXAM GmbH
Bochum, den 19. April 2012

Zertifizierungsstelle

Fachbereich

DEKRA EXAM GmbH, Dinnendahlstraße 9, 44809 Bochum, Telefon +49.234.3696-105, Telefax +49.234.3696-110, zs-exam@dekra.com

(13) Anlage zum

(14) **1. Nachtrag zur EG-Baumusterprüfbescheinigung**
BVS 10 ATEX E 146

(15) 15.1 Gegenstand und Typ

Barcodeleser Typ PSCAN-M-1*-*2* und Basisstation Typ PSCAN-B-*2*

15.2 Beschreibung

Der Barcodeleser und die Basisstation können auch nach den im zugehörigen Prüfprotokoll aufgeführten Prüfungsunterlagen gefertigt werden; sie wurden gemäß IEC 60079-0:2011 und EN 60079-11:2012 geprüft; einige Varianten können auch in Bereichen verwendet werden, die durch Staub explosionsgefährdet sind.

15.3 Kenngrößen

Unverändert

(16) Prüfprotokoll

BVS PP 10.2268 EG, Stand 19.04.2012

(17) Besondere Bedingungen für die sichere Anwendung

Entfällt

DEKRA EXAM GmbH, Dinnendahlstraße 9, 44809 Bochum, Telefon +49.234.3696-105, Telefax +49.234.3696-110, zs-exam@dekra.com

DEKRA

Translation

(1) # EC-Type Examination Certificate

(2) **- Directive 94/9/EC -**
Equipment and protective systems intended for use in potentially explosive atmospheres

(3) ## BVS 10 ATEX E 146

(4) **Equipment:** **Barcode reader type PSCAN-M-1*-*2* and base station type PSCAN-B-1-*2***

(5) **Manufacturer:** **Pepperl + Fuchs GmbH**

(6) **Address:** **68307 Mannheim, Germany**

(7) The design and construction of this equipment and any acceptable variation thereto are specified in the appendix to this type examination certificate.

(8) The certification body of DEKRA EXAM GmbH, notified body no. 0158 in accordance with Article 9 of the Directive 94/9/EC of the European Parliament and the Council of 23 March 1994, certifies that this equipment has been found to comply with the Essential Health and Safety Requirements relating to the design and construction of equipment and protective systems intended for use in potentially explosive atmospheres, given in Annex II to the Directive.
The examination and test results are recorded in the test and assessment report BVS PP 10.2268 EG.

(9) The Essential Health and Safety Requirements are assured by compliance with:

EN 60079-0:2009	General requirements
EN 60079-11:2007	Intrinsic safety 'i'
EN 60079-28:2007	Optical radiation

(10) If the sign "X" is placed after the certificate number, it indicates that the equipment is subject to special conditions for safe use specified in the appendix to this certificate.

(11) This EC-Type Examination Certificate relates only to the design, examination and tests of the specified equipment in accordance to Directive 94/9/EC.
Further requirements of the Directive apply to the manufacturing process and supply of this equipment. These are not covered by this certificate.

(12) The marking of the equipment shall include the following:

II 2G Ex ib [op is] IIB T4 Gb	for barcode reader
II 2G Ex ib IIB T4 Gb	for base station

DEKRA EXAM GmbH
Bochum, dated 23. November 2010

Signed: Simanski
Certification body

Signed: Dr. Eickhoff
Special services unit

DEKRA EXAM GmbH Dinnendahlstrasse 9 44809 Bochum Germany Phone +49 234/3696-105 Fax +49 234/3696-110 E-mail zs-exam@dekra.com

(13) Appendix to

(14) # EC-Type Examination Certificate

BVS 10 ATEX E 146

(15) 15.1 Subject and type

Barcode reader type PSCAN-M-1*-*2* and base station type PSCAN-B-1-*2*

Instead of the *** in the complete denomination letters or numerals will be inserted which characterize modifications without influence on the explosion protection.

15.2 Description

The barcode reader is used in combination with the base station in explosive atmospheres for reading of barcode markings and transmission of data.

15.3 Parameters

15.3.1	Barcode reader type PSCAN-M-1*-*2*				
15.3.1.1	Battery power supply				
	Battery voltage		DC	4.5	V
	Charging voltage	Um	DC	8	V
15.3.1.2	Radio frequency source				
	Frequency			433.92 or 910	MHz
	Power			≤ 1	W
15.3.1.3	Scanner				
	Optical power			≤ 35	mW
15.3.1.4	Ambient temperature range	Ta		-10 °C up to +40 °C	
15.3.2	Base station type PSCAN-B-1-*2*				
15.3.2.1	Connection KL1				
	Voltage	Ui	DC	9	V
	Current	Ii		400	mA
	Power	Pi		1.5	W
	Internal capacitance	Ci		negligible	
	Internal inductance	Li		10	µH
15.3.2.2	Radio frequency source				
	Frequency			433.92 or 910	MHz
	Power			≤ 1	W
15.3.2.3	Ambient temperature range	Ta		-10 °C up to +50 °C	

DEKRA EXAM GmbH Dinnendahlstrasse 9 44809 Bochum Germany Phone +49 234/3696-105 Fax +49 234/3696-110 E-mail zs-exam@dekra.com

(16) Test and assessment report

BVS PP 10.2268 EG as of 23.11.2010

(17) Special conditions for safe use

None

We confirm the correctness of the translation from the German original.
In the case of arbitration only the German wording shall be valid and binding.

44809 Bochum, den 23.11.2010
BVS-Schu/Her A 20100476

DEKRA EXAM GmbH

Certification body

Special services unit

DEKRA EXAM GmbH Dinnendahlstrasse 9 44809 Bochum Germany Phone +49 234/3696-105 Fax +49 234/3696-110 E-mail zs-exam@dekra.com

Translation

(1) # 1. Supplement to the EC-Type Examination Certificate

(2) Equipment and protective systems intended for use in potentially explosive atmospheres - Directive 94/9/EC
Supplement accordant with Annex III number 6

(3) No. of EC-Type Examination Certificate: **BVS 10 ATEX E 146**

(4) Equipment: **Barcode reader type PSCAN-M-1*-*2* and base station type PSCAN-B-*2***

(5) Manufacturer: **PEPPERL + FUCHS GMBH**

(6) Address: **68307 Mannheim, Germany**

(7) The design and construction of this equipment and any acceptable variation thereto are specified in the appendix to this supplement.

(8) The certification body of DEKRA EXAM GmbH, notified body no. 0158 in accordance with Article 9 of the Directive 94/9/EC of the European Parliament and the Council of 23 March 1994, certifies that this equipment has been found to comply with the Essential Health and Safety Requirements relating to the design and construction of equipment and protective systems intended for use in potentially explosive atmospheres, given in Annex II to the Directive. The examination and test results are recorded in the test and assessment report BVS PP 10.2268 EG.

(9) The Essential Health and Safety Requirements are assured by compliance with:

IEC 60079-0:2011 General requirements
EN 60079-11:2012 Intrinsic safety ´i´

(10) If the sign "X" is placed after the certificate number, it indicates that the equipment is subject to special conditions for safe use specified in the appendix to this certificate.

(11) This supplement to the EC-Type Examination Certificate relates only to the design, examination and tests of the specified equipment in accordance to Directive 94/9/EC.
Further requirements of the Directive apply to the manufacturing process and supply of this equipment. These are not covered by this certificate.

(12) The marking of the equipment shall include the following:

II 2G Ex ib [op is] IIB T4 Gb	for Barcode reader
II 2D Ex ib [op is] IIIB T135°C Db	Additional for type PSCAN-M-1*-F2*
II 2G Ex ib IIB T4 Gb	for base station
II 2D Ex ib IIIB T135°C Db	Additional for type PSCAN-B-F2*

DEKRA EXAM GmbH
Bochum, dated 19. April 2012

Signed: Dr. Eickhoff
Certification body

Signed: Dr. Wittler
Special services unit

DEKRA EXAM GmbH Dinnendahlstrasse 9 44809 Bochum Phone +49.234.3696-105 Fax +49.234.3696-110 zs-exam@dekra.com

(13) Appendix to

(14) **1. Supplement to the EC-Type Examination Certificate BVS 10 ATEX E 146**

(15) 15.1 Subject and type

Barcode reader type PSCAN-M-1*-*2* and base station type PSCAN-B-*2*

15.2 Description

The Barcode reader and the base station can be modified according to the descriptive documents as mentioned in the pertinent test and assessment report; they have been assessed in acc. with IEC 60079-0:2011 and EN 60079-11:2012 and some variants can be used in areas with combustible dust.

15.3 Parameters

Not changed.

(16) Test and assessment report

BVS PP 10.2268 EG as of 19.04.2012

(17) Special conditions for safe use

None

We confirm the correctness of the translation from the German original.
In the case of arbitration only the German wording shall be valid and binding.

DEKRA EXAM GmbH
44809 Bochum, 19. April 2012
BVS-Schu/Sp A 20120224

Certification body

Special services unit

DEKRA EXAM GmbH Dinnendahlstrasse 9 44809 Bochum Phone +49.234.3696-105 Fax +49.234.3696-110 zs-exam@dekra.com

PROCESS AUTOMATION – PROTECTING YOUR PROCESS

Worldwide Headquarters
Pepperl+Fuchs GmbH
68307 Mannheim · Germany
Tel. +49 621 776-0
E-mail: info@de.pepperl-fuchs.com

For the Pepperl+Fuchs representative
closest to you check www.pepperl-fuchs.com/contact

www.pepperl-fuchs.com

PEPPERL+FUCHS
PROTECTING YOUR PROCESS

227736 / TDOCT2101D_ENG
04/2015