Model Number

ORR50

Reflector, rectangular 50.9 mm x 50.9 mm, mounting holes, fixing strap

Features

- Mounting holes for simple installation

Dimensions

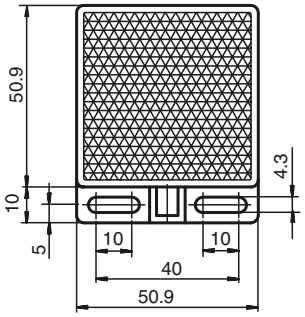

T = 6.3

Technical data

General specifications	
Construction type	rectangular
Ambient conditions	
Ambient temperature	-20 ... 70 °C (-4 ... 158 °F)
Mechanical specifications	
Material	PMMA/ABS
Dimensions	50.9 mm x 50.9 mm x 8.5 mm
Mounting	mounting holes

Release date: 2020-03-04 11:05 Date of issue: 2020-03-04 080873_eng.xml