

Model number

VBA-2E-KE2-I/U

KE control cabinet module
2 analog inputs

Features

- Housing with removable terminals
- Communication monitoring
- Addressing jack
- Function display for bus, internal and external sensor power supply, inputs
- Supply of inputs external or from the module, as required

Dimensions

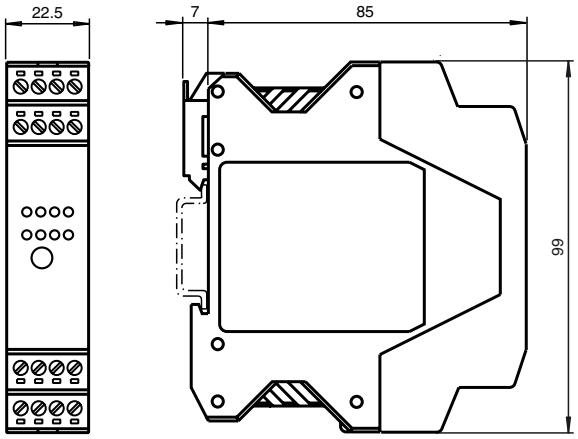

Electrical connection

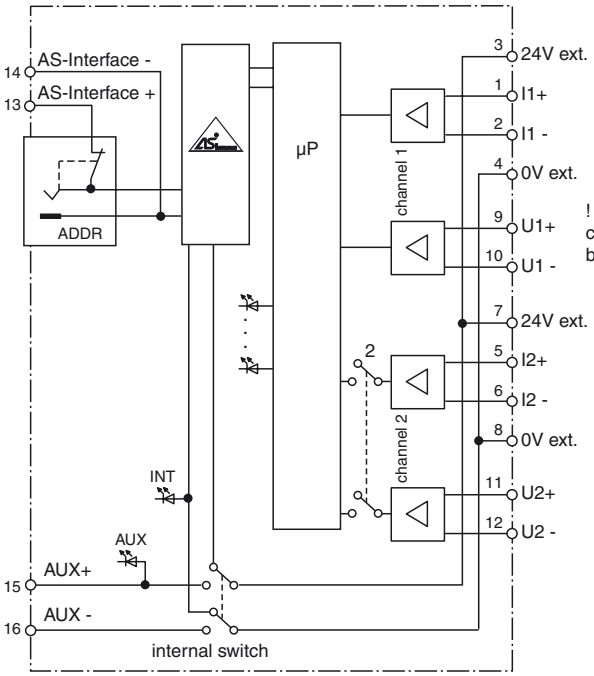

Connection examples:

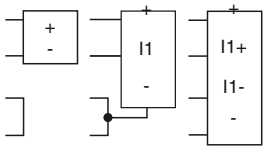

! Input channels which are not connected must be bridged between Sig+ und Sig-.

Connections	
	Input
1	I1 Sig. +
2	I1 Sig. -
3	24 V ext.
4	0 V ext.
5	I2 Sig. +
6	I2 Sig. -
7	24 V ext.
8	0 V ext.
9	U1 Sig. +
10	U1 Sig. -
11	U2 Sig. +
12	U2 Sig. -
13	AS-Interface +
14	AS-Interface -
15	AUX +
16	AUX -

Indicating / Operating means

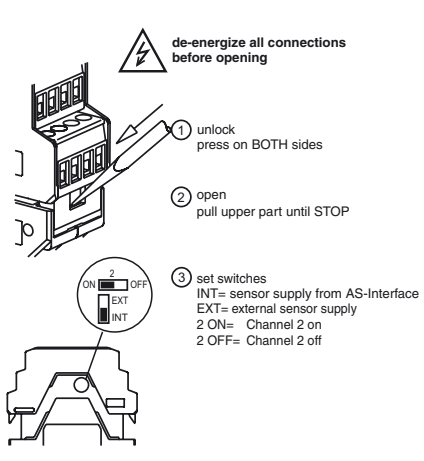

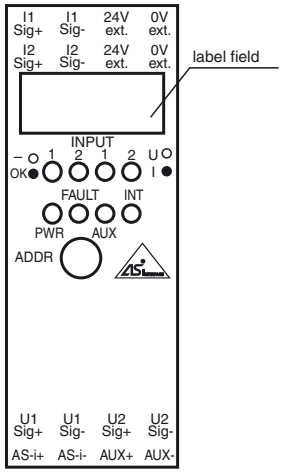

Release date: 2019-08-23 12:29 Date of issue: 2019-08-23 129381_eng.xml

Technical data

General specifications		
Slave type		Standard slave
AS-Interface specification		V2.1
Required master specification		≥ V2.1
UL File Number		E223772
Functional safety related parameters		
$MTTF_d$		140 a at 30 °C
Indicators/operating means		
LED FAULT		error display; LED red red: communication error red flashing: peripheral error or address 0
LED INT		Internal input supply active; LED green
LED PWR		AS-Interface voltage; LED green green: AS-Interface voltage OK green flashing: peripheral error or address 0
LED AUX		ext. auxiliary voltage U_{AUX} ; LED green
LED -/OK		Status input signal; LED green Off: Not connected (Only current module) On: Signal within measuring range Flashing: Signal outside measuring range
LED U/I		Current or voltage module; Green LED Off: Voltage input On: Current input
Electrical specifications		
Auxiliary voltage (output)	U_{AUX}	24 V DC ± 15 % PELV (protection class 3 according to VDE 0106/IEC 364-4-41)
Insulation voltage	U_i	≥ 500 V
Rated operating voltage	U_e	26.5 ... 31.6 V from AS-Interface
Rated operating current	I_e	≤ 80 mA
Input		
Number/Type		2 analog inputs Current: 4 ... 20 mA voltage: 0 ... 10 V
Supply		from AS-Interface or from external auxiliary voltage as required U_{AUX}
Current loading capacity		≤ 40 mA per input
Input resistance		For current module: 50 Ω For voltage module: 100 kΩ
Switching point		Changeover current/voltage module: current module with I_{in} ≥ 1 mA voltage module with U_{in} ≥ 1 V
Resolution		16 Bit / 1 µA (Current module) or 16 bit / 1 mV (Voltage module)
Directive conformity		
Electromagnetic compatibility		
Directive 2014/30/EU		EN 62026-2:2013 EN 61326:2002-03
Standard conformity		
Electromagnetic compatibility		EN 50295:1999-10, EN 61326:2002-03
Degree of protection		EN 60529:2000
AS-Interface		EN 62026-2:2013
Programming instructions		
Profile		S-7.3.D
IO code		7
ID code		3
ID2 code		D
Data bits (function via AS-Interface)		The transfer of the data value is based on AS-Interface Profile 7.3.
Parameter bits (programmable via AS-i)		**function**
P0		mains power frequency filter P0=1, 50 Hz filter active P0=0, 60 Hz filter active
P1		projecting of the 2nd channel P1=1, channel 2 is projected P1=0, channel 2 is not projected
P2		Message of peripheral error P2=1, peripheral error is reported P2=0, peripheral error is not reported
P3		P3=1, normal operating mode P3=0, both channels in current mode and without recognition of wire breakage
Ambient conditions		
Ambient temperature		0 ... 70 °C (32 ... 158 °F)
Storage temperature		-25 ... 85 °C (-13 ... 185 °F)
Mechanical specifications		
Degree of protection		IP20

Function

The VBA-2E-KE2-I/U analog module is equipped with two analog inputs that can be current inputs (4 mA ... 20 mA) or voltage inputs (0 ... 10 V). The module can also be connected as a combined current/voltage module. In this case the module type must be the same for each channel.
Depending on the setting of the internal sliding switch, the power supply for the measurement value transmitter is via the module (from the AS-Interface) or through an external power supply. The input power supply selection is displayed via the INT and AUX LEDs.
Measurement values are converted and data is transferred asynchronously based on AS-Interface Profile 7.3. The resolution of analog values is 16 bits with a value range of 4,000 ... 20,000 (current module) or 0 ... 10,000 (voltage module). Power faults can be eliminated with a parameterizable filter (50 Hz/60 Hz) in the A/D converter.
The second channel can be turned off with a second slide switch to allow for faster data transfer.
The housing, only 22.5 mm in width, takes up little place in the switch cabinet. The module is installed by snapping on the 35-mm carrier rail in accordance with EN 50022.
It can be connected by plug-in terminals (COMBICON). 4X terminal blocks (black) are used for the inputs. The connection of the external auxiliary supply and AS-Interface is made through the 2-way-terminal blocks (auxiliary supply gray, AS-Interface yellow). This makes it possible to separate individual sensors or to supply power during commissioning or servicing.

Note:
The device is equipped with communication monitoring that turns off the outputs if no AS-Interface communication has taken place with the device for more than 40 ms.
An overload of the internal input supply is reported by the 'periphery error' to the AS-Interface master. Communication over the AS-Interface remains in effect.

Accessories

VBP-HH1-V3.0-KIT
AS-Interface Handheld with accessory

VBP-HH1-V3.0
AS-Interface Handheld

VAZ-PK-1,5M-V1-G
Adapter cable module/hand-held programming device

Release date: 2019-08-23 12:29 Date of issue: 2019-08-23 129381_eng.xml

Refer to “General Notes Relating to Pepperl+Fuchs Product Information”.
Pepperl+Fuchs Group www.pepperl-fuchs.com
USA: +1 330 486 0001 fa-info@us.pepperl-fuchs.com
Germany: +49 621 776 4411 fa-info@de.pepperl-fuchs.com
Singapore: +65 6779 9091 fa-info@sg.pepperl-fuchs.com
PEPPERL+FUCHS SENSING YOUR NEEDS

Connection	removable terminals rated connection capacity: rigid/flexible (with and without wire-end ferrules): 0.25 mm^2 ... 2.5 mm^2 for multiple-wire connection with two wires of equal cross-section: flexible with twin wire-end ferrules: 0.5 mm^2 ... 1.5 mm^2
Material	
Housing	PA 66-FR
Mass	350 g
Mounting	DIN mounting rail

Notes

Do not connect inputs and outputs, which are supplied via the module from AS-interface or via auxiliary power, with power supply and signal circuits with external potentials.

Release date: 2019-08-23 12:29 Date of issue: 2019-08-23 129381_eng.xml