Switch Amplifier

HiC2841

- 1-channel isolated barrier
- 24 V DC supply (bus powered)
- Dry contact or NAMUR input
- Usable as signal splitter (1 input and 2 outputs)
- 2 passive transistor outputs
- Fault transistor output
- Line fault detection (LFD)
- Reversible mode of operation
- Up to SIL 2 (SC 3) acc. to IEC/EN 61508

Function

This isolated barrier is used for intrinsic safety applications.
The device transfers digital signals (NAMUR sensors/mechanical contacts) from the explosion-hazardous area to the non-explosion-hazardous area.
The input controls two passive transistors for the non-explosion-hazardous area load.
Via switches the mode of operation can be reversed and the line fault detection can be switched off.
Via switch the function of the second output can be defined as a signal output or a fault indication output.
During a fault state, the transistors revert to their de-energized state and LEDs indicate the fault according to NAMUR NE 44. A separate fault bus is available. This fault bus can be monitored if the termination board supports a module fault detection.
This device mounts on a HiC termination board.

Connection

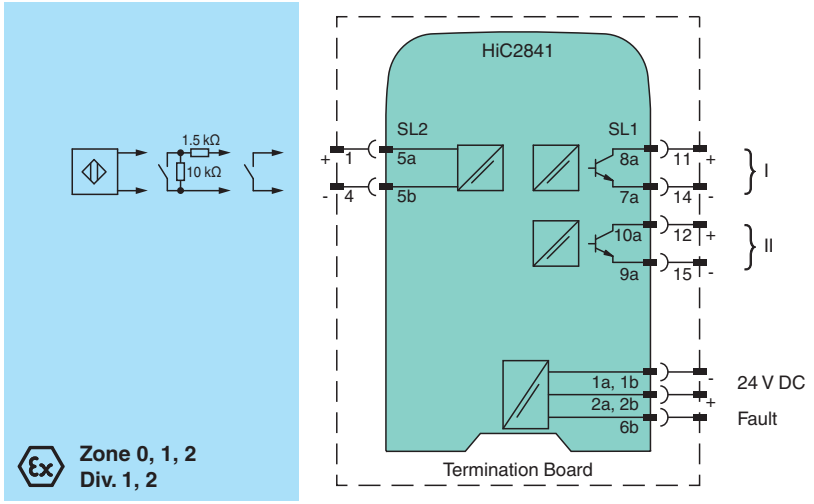

Technical Data

General specifications		
Signal type		Digital Input
Functional safety related parameters		
Safety Integrity Level (SIL)		SIL 2
Systematic capability (SC)		SC 3
Supply		
Connection		SL1: 1a, 1b(-); 2a, 2b(+)
Rated voltage	U_r	19 ... 30 V DC bus powered via Termination Board
Ripple		≤ 10 %

Release date: 2023-08-07 Date of issue: 2023-08-07 Filename: 214233_eng.pdf

Technical Data

Rated current	I_r	≤ 25 mA
Power dissipation		≤ 500 mW
Power consumption		≤ 600 mW
Input		
Connection side		field side
Connection		SL2: 5a(+), 5b(-)
Rated values		acc. to EN 60947-5-6 (NAMUR), see manual for electrical data
Open circuit voltage/short-circuit current		approx. 10 V DC / approx. 8 mA
Switching point/switching hysteresis		1.2 ... 2.1 mA / approx. 0.2 mA
Line fault detection		breakage I ≤ 0.1 mA , short-circuit I ≥ 6.5 mA
Pulse/Pause ratio		min. 100 µs / min. 100 µs
Output		
Connection side		control side
Connection		SL1: 8a(+), 7a(-); 10a(+), 9a(-)
Rated voltage	U_r	30 V DC
Rated current	I_r	50 mA
Response time		≤ 200 µs
Signal level		1-signal: (external voltage) - 1 V max. for 50 mA (T_{amb} = 25 °C (77 °F)) 0-signal: blocked output (off-state current ≤ 10 µA)
Output I		signal ; Transistor
Output II		signal or fault message ; Transistor
Fault indication output		
Connection		SL1: 6b
Output type		open collector transistor (internal fault bus)
Transfer characteristics		
Switching frequency		≤ 5 kHz
Galvanic isolation		
Output/power supply		basic insulation acc. to EN 50178, rated insulation voltage of 50 V AC
Output/Output		basic insulation acc. to EN 50178, rated insulation voltage of 50 V AC
Indicators/settings		
Display elements		LEDs
Control elements		DIP switch
Factory setting		input close, transistor closed, lead fault detection enabled
Configuration		via DIP switches
Labeling		space for labeling at the front
Directive conformity		
Electromagnetic compatibility		
Directive 2014/30/EU		EN 61326-1:2013 (industrial locations)
Conformity		
Galvanic isolation		EN 50178:1997
Electromagnetic compatibility		NE 21:2017 For further information see system description.
Degree of protection		IEC 60529:2001
Protection against electrical shock		IEC 61140
Ambient conditions		
Ambient temperature		-40 ... 70 °C (-40 ... 158 °F)
Relative humidity		≤ 90 % , non-condensing
Mechanical specifications		
Degree of protection		IP20
Mass		approx. 90 g
Dimensions		12.5 x 106 x 128 mm (0.5 x 4.2 x 5.1 inch) (W x H x D)
Mounting		on termination board
Coding		pin 1 and 2 trimmed For further information see system description.

Release date: 2023-08-07 Date of issue: 2023-08-07 Filename: 214233_eng.pdf

Technical Data

Data for application in connection with hazardous areas		
EU-type examination certificate		BVS 09 ATEX E 157
Marking		Ⓔx II (1)G [Ex ia Ga] IIC Ⓔx II (1)D [Ex ia Da] IIIC Ⓔx I (M1) [Ex ia Ma] I
Input		Ex ia, Ex iaD
Voltage	U_o	10.5 V
Current	I_o	17.1 mA
Power	P_o	45 mW (linear characteristic)
Supply		
Maximum safe voltage	U_m	253 V AC (Attention! U_m is no rated voltage.)
Output		
Maximum safe voltage	U_m	253 V AC (Attention! The rated voltage can be lower.)
Galvanic isolation		
Input/Output		safe electrical isolation acc. to IEC/EN 60079-11, voltage peak value 375 V
Input/power supply		safe electrical isolation acc. to IEC/EN 60079-11, voltage peak value 375 V
Directive conformity		
Directive 2014/34/EU		EN IEC 60079-0:2018+AC:2020 , EN 60079-11:2012 , EN 50303:2000
International approvals		
UL approval		E106378
Control drawing		116-0331
IECEx approval		
IECEx certificate		IECEx BVS 09.0060
IECEx marking		[Ex ia Ga] IIC , [Ex ia Da] IIIC , [Ex ia Ma] I
General information		
Supplementary information		Observe the certificates, declarations of conformity, instruction manuals, and manuals where applicable. For information see www.pepperl-fuchs.com.

Assembly

Front view

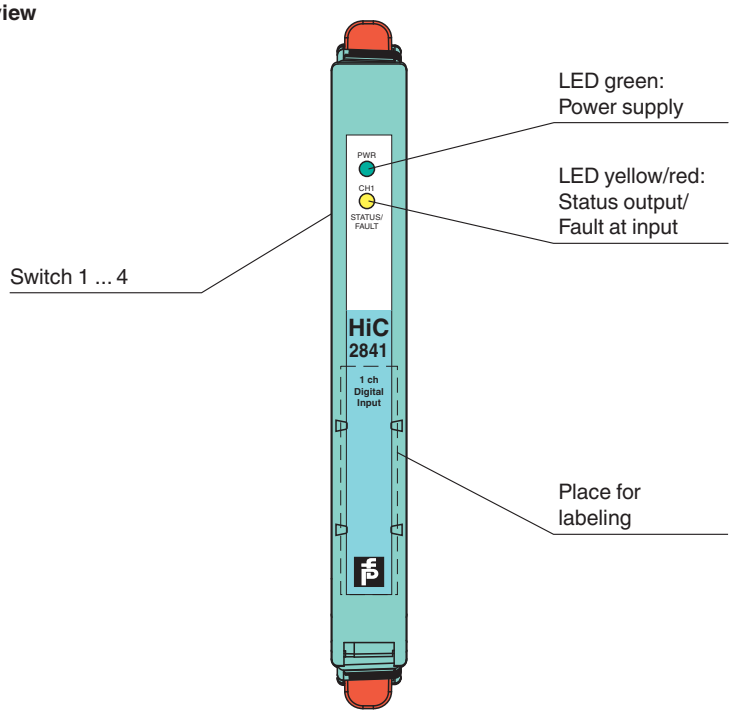

Release date: 2023-08-07 Date of issue: 2023-08-07 Filename: 214233_eng.pdf

Configuration

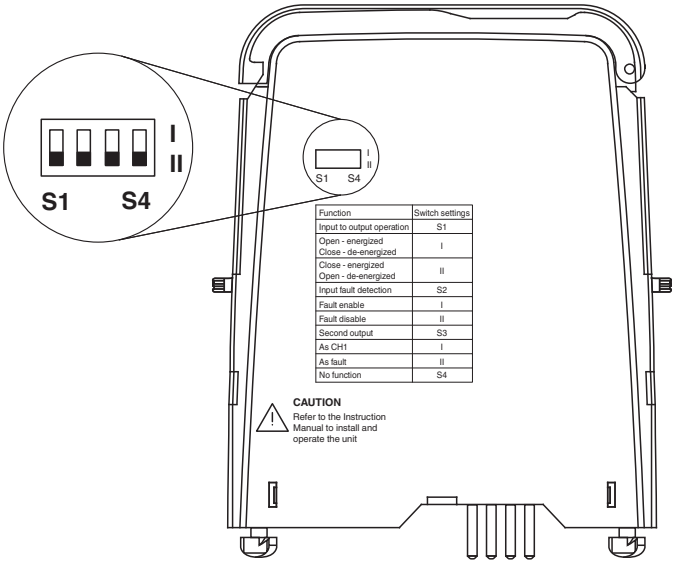

Function	Switch settings
Input to output operation	S1
Open - energized Close - de-energized	I
Close - energized Open - de-energized	II
Input fault detection	S2
Fault enable	I
Fault disable	II
Second output	S3
As CH1	I
As fault	II
No function	S4

Safety Information

The pins for this device are trimmed to polarize it according to its safety parameter. Do not change this setting!
For further information see system manual.

Configuration

Configure the device in the following way:
- Push the red Quick Lok Bars on each side of the device in the upper position.
- Remove the device from termination board.
- Set the switches according to the figure in the **Configuration** section.

Release date: 2023-08-07 Date of issue: 2023-08-07 Filename: 214233_eng.pdf