Model Number

PCV-SC12

Grounding clip for PCV system

Features

- Stainless steel version
- Low weight
- M12 plug connection
- High mechanical stability

Dimensions

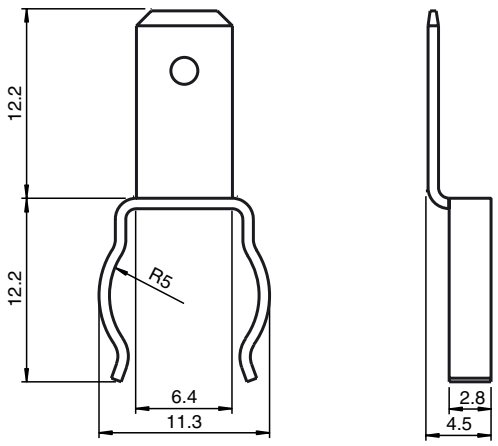

Technical data

General specifications	
Description	Clip for fastening an additional ground connection.
Mechanical specifications	
Material	Stainless steel
Mass	1 g

Release date: 2012-01-12 09:01 Date of issue: 2012-02-13 244791_eng.xml