Power Hub Motherboard

FieldConnex® Fieldbus

MBHC-FB-4R

- 4 segments, redundant, individual modules per segment
- Supports all PLC and PCS hosts
- High-power trunk: Live work on devices in any hazardous area
- Best quality, smallest size and lowest heat dissipation
- For FOUNDATION Fieldbus H1
- Optional advanced diagnostics
- Passive impedance for high reliability
- Supports Ex ic voltage limitation
- Installation in Zone 2/Div. 2
- Spring terminals or screw terminals selectable

Power hub motherboard with common host interface

Function

The FieldConnex® Compact Power Hub is a modular fieldbus power supply for four segments with lowest power dissipation and smallest foot print. It supports explosion protection e.g. the High-Power Trunk for longest cable run and highest device count. The Power Hub supports optional Advanced Diagnostics for fast fieldbus commissioning and online monitoring.
The motherboard for redundant power supply modules is the wiring interface with connectors for all DCS and PLC host systems. Sockets for all modules enable simple installation and replacement without tools. For power redundancy with seamless transfer, pairs of modules feed each segment. Wire connections can be selected as spring terminals or screw terminals.
This design allows the most compact cabinet layout. Excellent availability and a very long service life are achieved through: passive impedance filter per segment, high-availability fieldbus termination and plug-in connectors with retaining screws. Electronics are optimized for lowest power dissipation and compactness.

Connection

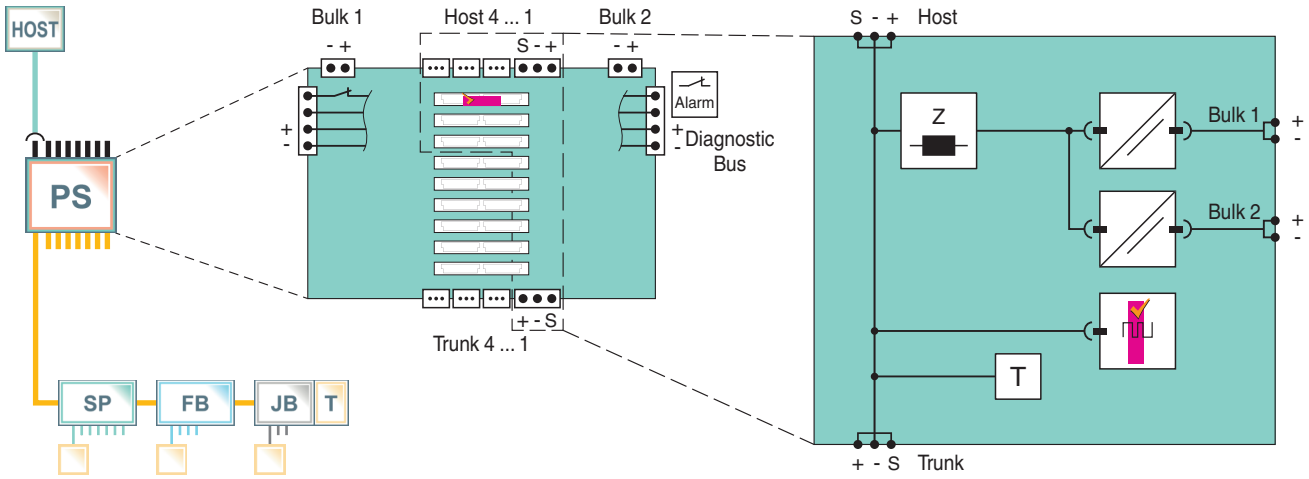

Technical Data

General specifications		
Design / Mounting		Motherboard based
Installation in hazardous area		Zone 2 / Div. 2
Supply		
Connection		redundant
Rated voltage	U_r	19.2 ... 35 V SELV/PELV
Rated current	I_r	12 A

Release date: 2024-12-06 Date of issue: 2024-12-06 Filename: 267022_eng.pdf

Technical Data

Power dissipation	typ. 0.4 W per segment
Fieldbus connection	
Number of segments	4 Redundant Power Supply
Host-side	general purpose host
Terminating resistor	100 Ω integrated
Indicators/operating means	
Fault signal	VFC alarm 1 A, 50 V DC, normally closed
Galvanic isolation	
Fieldbus segment/Fieldbus segment	functional insulation acc. to IEC 62103, rated insulation voltage 50 V_{eff}
Fieldbus segment/Supply	functional insulation acc. to IEC 62103, rated insulation voltage 250 V_{eff}
Directive conformity	
Electromagnetic compatibility	
Directive 2014/30/EU	EN 61326-1:2013
Standard conformity	
Electromagnetic compatibility	NE 21:2011
Degree of protection	IEC 60529
Fieldbus standard	IEC 61158-2
Shock resistance	EN 60068-2-27
Vibration resistance	EN 60068-2-6
Ambient conditions	
Ambient temperature	-40 ... 70 °C (-40 ... 158 °F)
Storage temperature	-40 ... 85 °C (-40 ... 185 °F)
Relative humidity	< 95 % non-condensing
Shock resistance	10 g , 11 ms
Vibration resistance	1 g , 10 ... 150 Hz
Pollution degree	max. 2, according to IEC 60664
Corrosion resistance	acc. to ISA-S71.04-1985, severity level G3
Mechanical specifications	
Connection type	screw terminal , pluggable
Core cross section	2.5 mm^2
Housing material	Polycarbonate
Degree of protection	IP20
Mass	approx. 580 g
Mounting	DIN rail mounting
Data for application in connection with hazardous areas	
Certificate	TÜV 10 ATEX 555761X
Marking	Ⓔx II 3G Ex ec IIC T4 Gc
Directive conformity	
Directive 2014/34/EU	EN 60079-0:2012 , EN 60079-11:2012 , EN 60079-15:2010
International approvals	
FM approval	CoC 3024816, CoC 3024816C
Approved for	Class I, Division 2, Groups A, B, C, D, T4 / Class I, Zone 2, AEx/Ex nA IIC T4
IECEx approval	IECEx TUN 13.0037X
Certificates and approvals	
Marine approval	DNV A-14038
General information	
Supplementary information	Observe the certificates, declarations of conformity, instruction manuals, and manuals where applicable. For information see www.pepperl-fuchs.com.

Release date: 2024-12-06 Date of issue: 2024-12-06 Filename: 267022_eng.pdf

Assembly

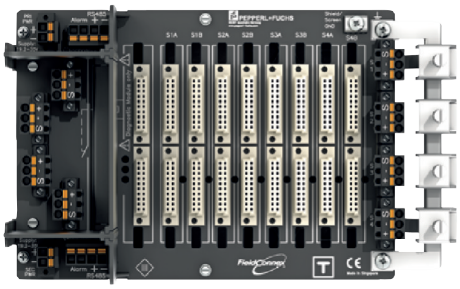

Release date: 2024-12-06 Date of issue: 2024-12-06 Filename: 267022_eng.pdf

Additional Information

Dimensions and Assembly

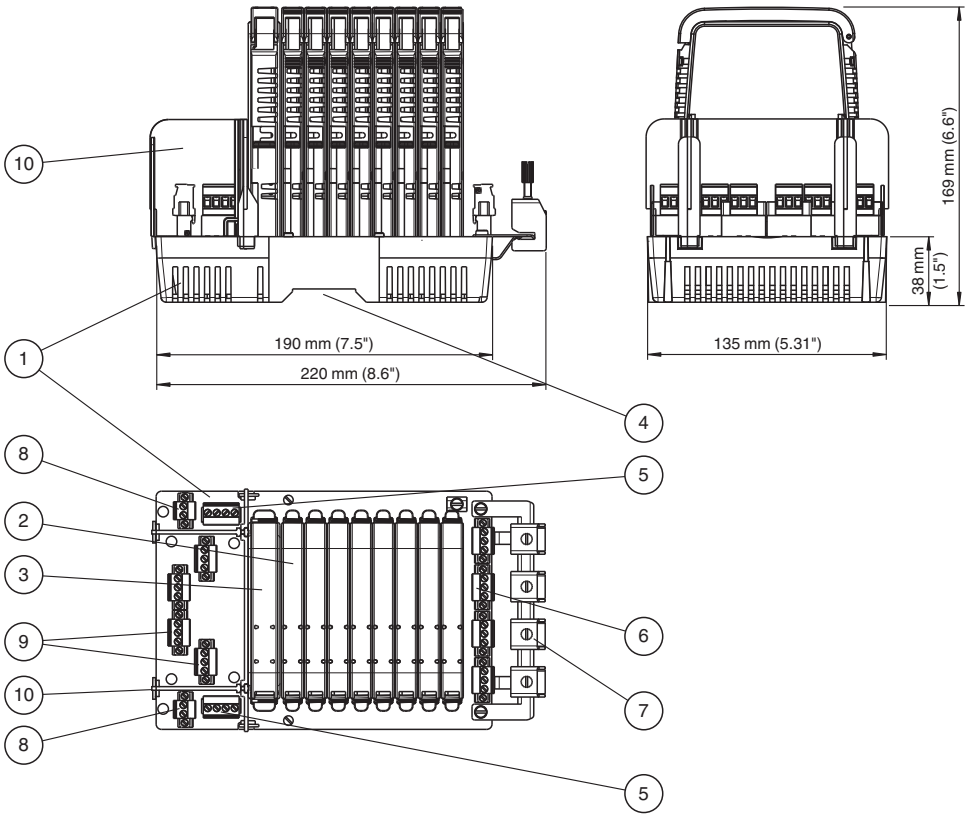

Description:
1 Motherboard MBHC-FB-4R*
2 Power supply modules
3 Diagnostic module
4 Mounting slot for DIN mounting rail
5 Connections for alarm voltage-free contact and diagnostic bus
6 Connections for fieldbus trunk
7 Screening/earthing kit for trunk shields, optional accessory
8 Connections for bulk power supply
9 Connections for host
10 Separation wall

Components

Compatible Power Supply Modules

		HCD2-FBPS-1.23.500	HCD2-FBPS-1.500	
Power Output				
Voltage (V)		21 ... 23	28 ... 29.5	
Current (mA)		500	500	
Limit U_0 (V)		24	30	
Device in ...	**Type of Protection**			**Required Installation Components**
Zone 0/Div. 1	Intrinsically safe Ex ia		■	FieldBarrier
Zone 1/Div. 1	Intrinsically safe Ex ia		■	FieldBarrier
Zone 1/Div. 1	Flameproof Ex d		■	Segment Protector R-SP-E12 or any Segment Protector installed in Zone 2
Zone 2	Intrinsically safe Ex ic (Entity)	■	■	Selected Segment Protectors
Div. 2	Non-incendive	■	■	Any Segment Protector; power module selection depends on voltage of field device

Release date: 2024-12-06 Date of issue: 2024-12-06 Filename: 267022_eng.pdf

Safe Area	No specific type of protection		■	Segment Protector recommended

For more details on the power supply modules see respective data sheets.

Diagnostic Module Selection

The following diagnostic modules are compatible with this motherboard.

Type code	Description
HD2-DM-B	Diagnostic Module, basic version
HD2-DM-A	Diagnostic Module, advanced version
HD2-DM-A.RO	Diagnostic Module, advanced version, relay output

The stationary and mobile Advanced Diagnostic Module (ADM) and related components provide measurement tools for the fieldbus physical layer. The ADM monitors many quality indicating values of the fieldbus physical layer. An expert system, which is included, analyzes the values and issues easy to understand messages indicating cause and remedy. The ADM is recommended for:

- **Faster commissioning and plant start-up:** Installation issues are known and corrected before loop check commences
- **Reliable operation through online monitoring**: The quality of the physical layer and installation is monitored making fieldbus a manageable asset
- **Efficient troubleshooting:** An expert system guides the user through issues and faults in the fieldbus installation

Many other tools are included that enhance fieldbus installation and upkeep. Please see datasheet on HD2-DM-A.

Product Versions

Type code	Description
MBHC-FB-4R	Motherboard for redundant power supplies with pluggable screw terminals applicable for all systems
MBHC-FB-4R.1	Motherboard for redundant power supplies with pluggable spring terminals applicable for all systems

Release date: 2024-12-06 Date of issue: 2024-12-06 Filename: 267022_eng.pdf