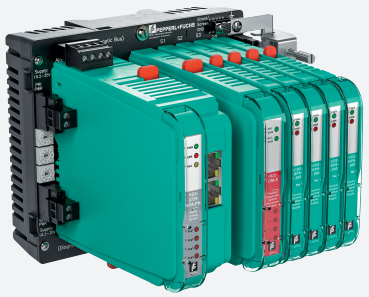

Power Hub Motherboard

FieldConnex® Fieldbus

MBHC-FB-4.GT

- 4 segments, simplex, individual modules per segment
- For PROFIBUS PA
- For gateway and power supply modules
- High-power trunk: Live work on devices in any hazardous area
- Optional advanced diagnostics
- Installation in Zone 2/Class I, Div. 2
- Spring terminals or screw terminals selectable

Power hub motherboard for gateway and power supply modules

Function

The motherboard is a system component of the FieldConnex®Power Hub, a modular fieldbus power supply for 4 segments. It is the wiring interface for one gateway, one advanced diagnostic module, and 4 power supply modules. The power supply supports explosion protection, e. g., the high-power trunk for long cable lengths and high device counts. The Power Hub supports advanced diagnostics for fast fieldbus commissioning and online monitoring.
Sockets for all modules enable simple installation and replacement without tools. Wire connections can be selected as spring terminals or screw terminals.
The motherboard supports a choice of gateways for different host protocols. A PROFIBUS PA master for each segment enables short bus cycle times. The DCS can access the advanced diagnostic module directly via the gateway without additional wiring or configuration.
This design allows the most compact cabinet layout. Excellent availability and a long service life are achieved through the following features: A passive impedance filter per segment without active electronic components, a high-availability fieldbus termination, and plugs with retaining screws.

Connection

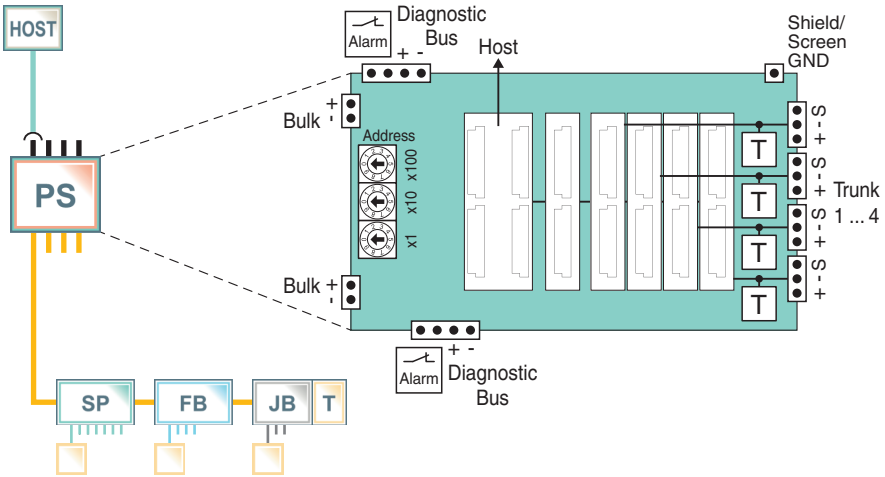

Technical Data

General specifications		
Design / Mounting		Motherboard based
Installation in hazardous area		Zone 2 / Div. 2
Supply		
Connection		redundant
Rated voltage	U_r	19.2 ... 35 V SELV/PELV
Rated current	I_r	12 A
Power dissipation		typ. 0.4 W per segment

Release date: 2024-11-27 Date of issue: 2024-11-27 Filename: 276877_eng.pdf

Technical Data

Fieldbus connection	
Number of segments	4
Terminating resistor	100 Ω integrated
Indicators/operating means	
Fault signal	VFC alarm 1 A, 50 V DC, normally closed
Rotary switch	bus addressing, gateway-specific
Galvanic isolation	
Fieldbus segment/Fieldbus segment	functional insulation acc. to IEC 61010, rated insulation voltage 50 V_{eff}
Fieldbus segment/Supply	functional insulation acc. to IEC 61010, rated insulation voltage 50 V_{eff}
Directive conformity	
Electromagnetic compatibility	
Directive 2014/30/EU	EN 61326-1:2013
Standard conformity	
Electromagnetic compatibility	NE 21:2011
Degree of protection	IEC 60529
Fieldbus standard	IEC 61158-2
Shock resistance	EN 60068-2-27
Vibration resistance	EN 60068-2-6
Ambient conditions	
Ambient temperature	-40 ... 70 °C (-40 ... 158 °F)
Storage temperature	-40 ... 85 °C (-40 ... 185 °F)
Relative humidity	< 95 % non-condensing
Shock resistance	10 g , 11 ms
Vibration resistance	1 g , 10 ... 150 Hz
Pollution degree	max. 2, according to IEC 60664
Corrosion resistance	acc. to ISA-S71.04-1985, severity level G3
Mechanical specifications	
Connection type	screw terminal , pluggable
Core cross section	2.5 mm^2
Housing material	Polycarbonate
Degree of protection	IP20
Mass	approx. 540 g
Mounting	DIN rail mounting
Data for application in connection with hazardous areas	
Certificate	TÜV 15 ATEX 7735 X
Marking	Ⓔx II 3G Ex ec IIC T4 Gc
Directive conformity	
Directive 2014/34/EU	EN IEC 60079-0:2018+AC:2020 , EN 60079-7:2015+A1:2018
International approvals	
IECEx approval	IECEx TUR 16.0007X
Approved for	Ex ec IIC T4 Gc
Certificates and approvals	
Marine approval	pending
General information	
Supplementary information	Observe the certificates, declarations of conformity, instruction manuals, and manuals where applicable. For information see www.pepperl-fuchs.com.

Release date: 2024-11-27 Date of issue: 2024-11-27 Filename: 276877_eng.pdf

Assembly

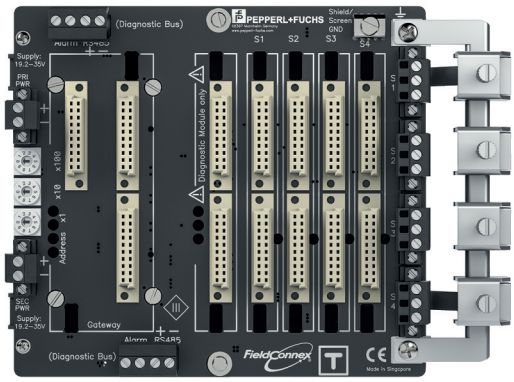

Release date: 2024-11-27 Date of issue: 2024-11-27 Filename: 276877_eng.pdf

Dimensions and Assembly

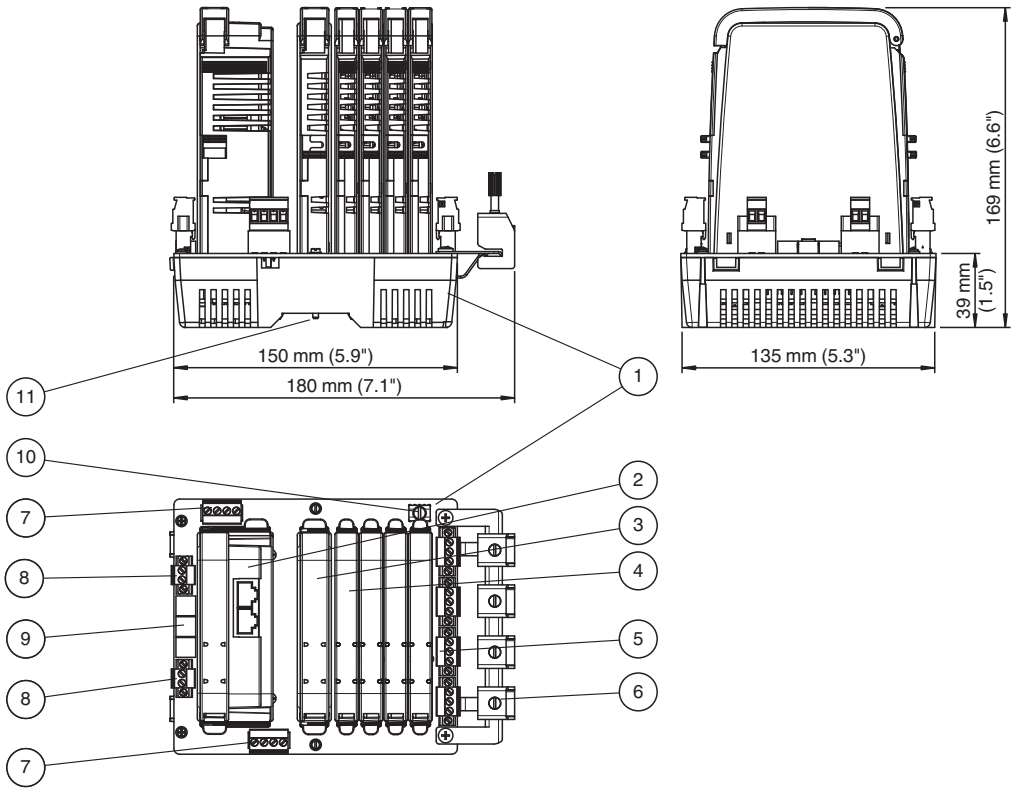

Description:
1 Motherboard MBHC-FB-4.GT
2 Gateway module
3 Diagnostic module
4 Power supply modules (x 4)
5 Trunk connection
6 Shielding/grounding kit for trunk shields, optional accessory
7 Connections: Volt-free contact alarm and diagnostic bus (x 2)
8 Connection for bulk power supply (x 2)
9 Rotary switches for gateway addressing x1, x10, x100
10 Shield connection
11 Mounting slot for DIN rail mounting

Product Versions

Type Code	Description
MBHC-FB-4.GT	Motherboard with pluggable screw terminals
MBHC-FB-4.GT.1	Motherboard with pluggable spring terminals

Components

Compatible Power Supply Modules

		HCD2-FBPS-1.23.500	HCD2-FBPS-1.500	
Power Output				
Voltage (V)		21 ... 23	28 ... 29.5	
Current (mA)		500	500	
Limit U_0 (V)		24	30	
Device in ...	**Type of Protection**			**Required Installation Components**
Zone 0/Div. 1	Intrinsically safe Ex ia		■	FieldBarrier

Release date: 2024-11-27 Date of issue: 2024-11-27 Filename: 276877_eng.pdf

Zone 1/Div. 1	Intrinsically safe Ex ia		■	FieldBarrier
Zone 1/Div. 1	Flameproof Ex d		■	Segment Protector R-SP-E12 or any Segment Protector installed in Zone 2
Zone 2	Intrinsically safe Ex ic (Entity)	■	■	Selected Segment Protectors
Div. 2	Non-incendive	■	■	Any Segment Protector; power module selection depends on voltage of field device
Safe Area	No specific type of protection		■	Segment Protector recommended

For more details on the power supply modules see respective data sheets.

Diagnostic Module Selection

The following diagnostic modules are compatible with this motherboard.

Type code	Description
HD2-DM-B	Diagnostic Module, basic version
HD2-DM-A	Diagnostic Module, advanced version
HD2-DM-A.RO	Diagnostic Module, advanced version, relay output

The stationary and mobile Advanced Diagnostic Module (ADM) and related components provide measurement tools for the fieldbus physical layer. The ADM monitors many quality indicating values of the fieldbus physical layer. An expert system, which is included, analyzes the values and issues easy to understand messages indicating cause and remedy. The ADM is recommended for:

- **Faster commissioning and plant start-up:** Installation issues are known and corrected before loop check commences
- **Reliable operation through online monitoring**: The quality of the physical layer and installation is monitored making fieldbus a manageable asset
- **Efficient troubleshooting:** An expert system guides the user through issues and faults in the fieldbus installation

Many other tools are included that enhance fieldbus installation and upkeep. Please see datasheet on HD2-DM-A.

Available PROFIBUS and PROFINET Power Hub System Components

The following list describes all available PROFIBUS and PROFINET Power Hub system components as an overview and quick reference beyond the component described in this datasheet.

Type Code	Description
HD2-GTR-4PA	PROFIBUS DP to PROFIBUS PA gateway module, 4 PROFIBUS PA segments.
HD2-GTR-4PA.PN	PROFINET to PROFIBUS PA gateway module, 4 PROFIBUS PA segments.
HCD2-FBPS-1.500	Power supply module 30 V/500 mA.
HCD2-FBPS-1.23.500	Power supply module 23 V/500 mA.
HD2-DM-A*	Advanced physical layer diagnostic module.
HD2-DM-B	Basic diagnostic module.
MB-FB-GTR1	Motherboard for gateway redundancy, slots for 2 gateway modules.
MBHC-FB-4.GT*	Compact Power Hub motherboard for 4 segments, slots for 4 power supply modules, 1 diagnostic module, and 1 gateway module. Connector options: Removable screw terminals or spring terminals.
MBHC-FB-4.HSC*	Compact Power Hub motherboard for 4 segments, slots for 4 power supply modules and 1 diagnostic module. Connector options: Removable screw terminals or spring terminals.
MBHC-FB-4R.HSC*	Compact Power Hub motherboard for 4 redundant segments, slots for 8 power supply modules and 1 diagnostic module. Connector options: Removable screw terminals or spring terminals.
KT-MB-FB-D-4R.GEN	DART high-density Power Hub with generic interface for 4 redundant segments, slots for 8 power supply modules with 1 diagnostic module.

Release date: 2024-11-27 Date of issue: 2024-11-27 Filename: 276877_eng.pdf

Applicable Combinations of Gateway Motherboards, System Modules with Motherboards

		GW MBs	GW Modules		Power Supplies		Diagnostic Modules	
		MB-FB-GTR1	HD2-GTR-4PA	HD2-GTR-4PA.PN	HCD2-FBPS-1.23.500	HCD2-FBPS-1.500	HD2-DM-A*	HD2-DM-B
MBs or Power Hub Kits	MBHC-FB-4.HSC*	x			x	x	x	x
	MBHC-FB-4R.HSC*	x			x	x	x	x
	KT-MB-FB-D-4R.GEN	x					x	x
GW MBs	MB-FB-GTR1		x	x				
	MBHC-FB-4.GT		x	x	x	x	x	x

For more details on the components see respective datasheets.

Example: Simplex Power Hub for 4 Segments

The table lists the components of a typical Power Hub.
Optional accessories are also listed.

No.	Product Component	Model Type/Order Number
1	Motherboard	MBHC-FB-4.GT
4	Power supply modules	HCD2-FBPS-1.500
4	Surge protectors	TPH-LBF-IA1.36.DE*
1	Earth bar for surge protectors	ACC-LBF-EB.8
1	Advanced diagnostic module	HD2-DM-A
1	PROFIBUS or PROFINET gateway module	HD2-GTR-4PA*

Release date: 2024-11-27 Date of issue: 2024-11-27 Filename: 276877_eng.pdf