Cable Glands, Metal, Barrier Glands for non-armored Cables

CG.BN.M25S.SS.S.16.K01

- For cables without armor
- Barrier gland
- Stainless Steel
- Thread M25
- Seal silicone
- Ex db, Ex eb and Ex tb certified
- Suitable for operation in Zone 1, Zone 2, Zone 21 and Zone 22
- Packaging unit: 1 piece, kit with accessories
- USA usage prohibited!

Dimensions

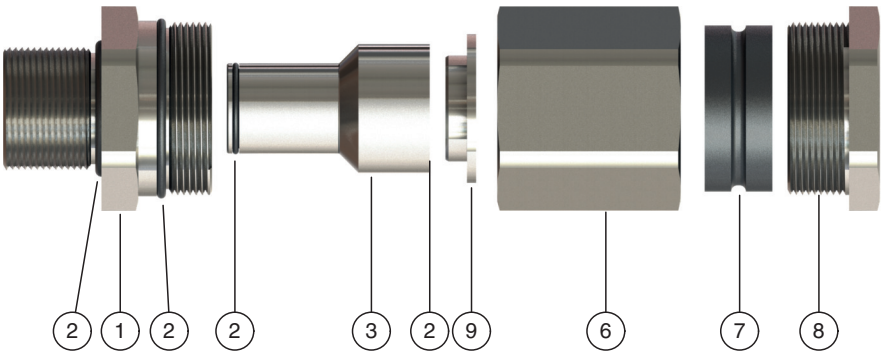

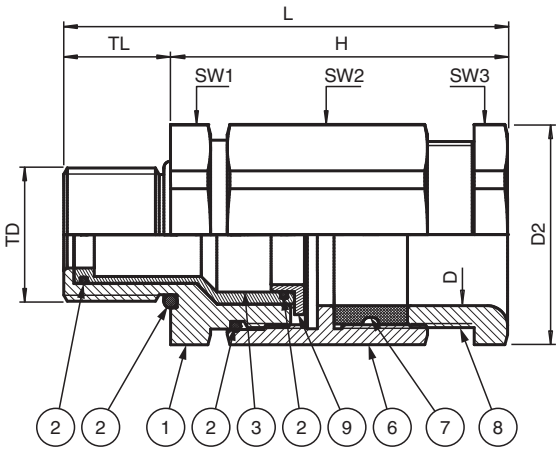

Release date: 2026-05-28 Date of issue: 2026-05-28 Filename: 319427_eng.pdf

Dimensions

Details see data table

Legend	
1	Gland body basis
2	O-Ring
3	Barrier tube
4	Armor cone (CG.BA.*)
5	Swifel braid ring (CG.BA.*)
6	Gland body
7	Seal insert
8	Pressure nut
9	Barrier pressure ring bushing (CG.BN.*)
D	Clamping range, cable sheath diameter
D2	Width across corners
H	Length outside enclosure
L	Total length
SW*	Width across flats
TD	Thread size
TL	Thread length
	Barrier details in data table
CQ	Max. number of cores
DS	Core cross-section, single-core cable
DM	Total core cross-section, multi-core cable
CC	Max. total core cross-section area

Technical Data

Mechanical specifications	
Cable type	non-armored cables
Clamping range (D)	8 ... 15 mm
Thread type	metric ISO pitch 1.5 mm
Thread size (TD)	M25
Degree of protection	IP66 / IP68
Material	
Finish	inherent color silver
Cable gland	AISI 316 (1.4404) stainless steel
O-Ring	silicone
Seal insert	silicone
Casting compound	
Description	EP 2122 Epoxy Putty Compound must be ordered separately
Part number	70101827
Mass	60 g
Required amount per cable gland	7 g
Packaging units per delivery quantity cable glands	1
Cable glands per packaging unit casting compound	8
Mass	
Individual component	approx. 174 g

Release date: 2026-05-28 Date of issue: 2026-05-28 Filename: 319427_eng.pdf

Technical Data

Packing unit	approx. 181 g
Dimensions	
Width across corners (D2)	33 mm
Diameter thru-hole (DT)	25 ... 25.2 mm
Number of cores (CQ)	max. 9
Core cross section, single-core cable (DS)	1.5 ... 9.5 mm
Total core cross section, multi-core cables (DM)	1.5 ... 9.5 mm
Total core cross section area (CC)	max. 70.9 mm^2
Length outside enclosure (H)	49.2 mm
Width across flats (SW1)	30 mm
Width across flats (SW2)	25 mm
Width across flats (SW3)	25 mm
Thread length (TL)	16 mm
Total length (L)	65.2 mm
Tightening torque	
Nut torque at enclosure (SW1)	60 Nm
Nut torque 2 (SW2)	60 Nm
Nut torque 3 (SW3)	25 Nm
Ambient conditions	
Ambient temperature	-60 ... 100 °C (-76 ... 212 °F)
Data for application in connection with hazardous areas	
EU-type examination certificate	CESI 18 ATEX 037X
Marking	Ⓔx II 2 GD Ex db IIC Gb Ex eb IIC Gb Ex tb IIIC Db
International approvals	
IECEx approval	IECEx CES 18.0030X
UKCA approval	CML 22 UKEX 1268X
CCC approval	2021312313000456
Conformity	
Degree of protection	EN 60529
CE marking	0102
General information	
Delivery quantity	1
Scope of delivery	Cable gland pair of gloves Brief instructions
Supplementary information	EC-Type Examination Certificate, Statement of Conformity, Declaration of Conformity, Attestation of Conformity and instructions have to be observed where applicable. For information see www.pepperl-fuchs.com.

Release date: 2026-05-28 Date of issue: 2026-05-28 Filename: 319427_eng.pdf