Distance sensor

OMR50M-R1000-B17-2V1DV1

- PROFINET interface with integrated switch
- Maximum measurement accuracy
- Red laser as the light emitter
- Display and keypad for parameter settings
- Compact and space-saving design
- Measuring method PRT (Pulse Ranging Technology)

Distance sensor for positioning tasks accurate to the millimeter, PRT, measuring range up to 50 m, PROFINET, M12 plug

Function

The R1000 family is based on pulse ranging technology (PRT) by Pepperl+Fuchs. For small and large ranges, these distance sensors are very precise which makes them ideally suitable for positioning tasks. The red laser diode is clearly visible, allowing direct alignment of the device for reliable operation.

Application

- Precise positioning of stock feeders
- Precise and rapid positioning of moving carriages
- For use on gantry cranes and lifting equipment

Release date: 2026-09-16 Date of issue: 2026-09-16 Filename: 324444-100007_eng.pdf

Dimensions

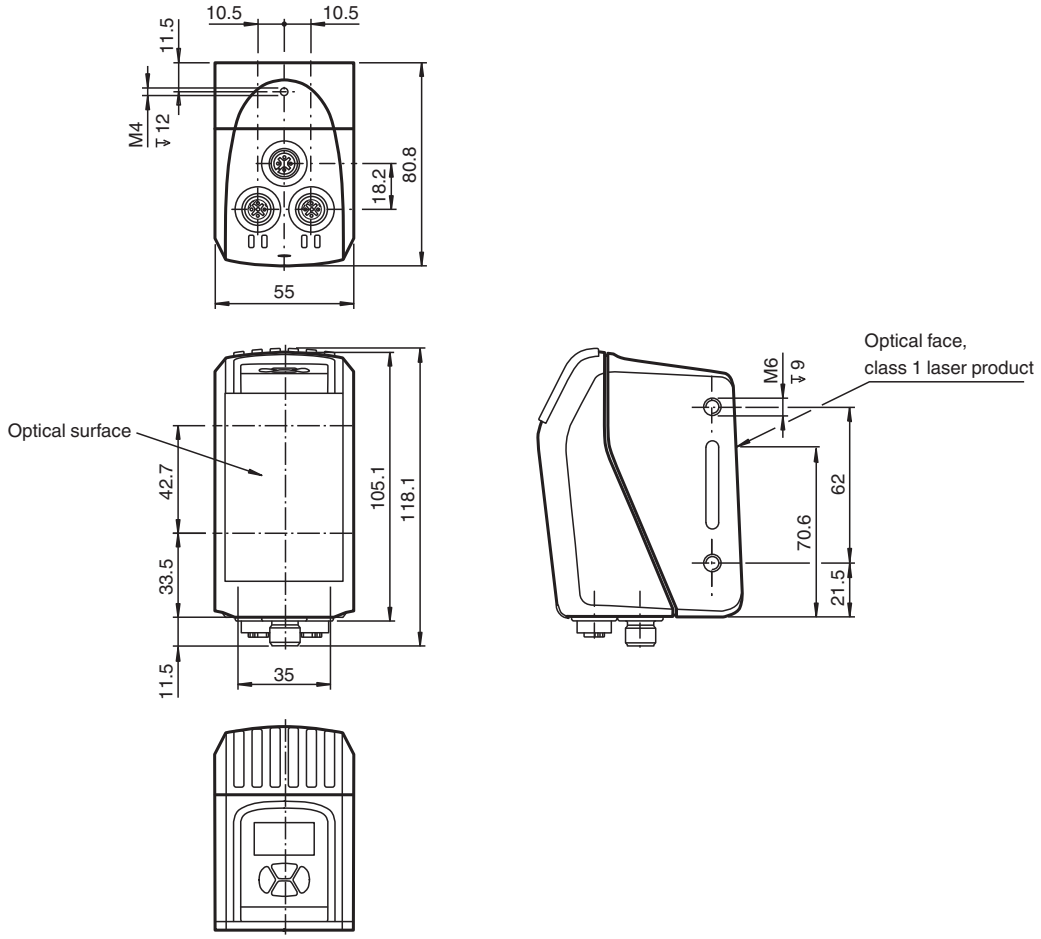

Technical Data

General specifications	
Measuring range	0.3 ... 50 m
Reference target	REF-500MMx500MM (Foil reflector 500 mm x 500 mm) REF-250MMx250MM (Film reflector 250 mm x 250 mm) up to 75 m
Light source	laser diode
Light type	modulated visible red light
Laser nominal ratings	
Note	LASER LIGHT , DO NOT STARE INTO BEAM
Laser class	1
Wave length	660 nm
Beam divergence	< 5 mrad
Pulse length	5 ns
Repetition rate	300 kHz
max. pulse energy	< 2 nJ
Measuring method	Pulse Ranging Technology (PRT)
Max. Motion velocity	15 m/s
Diameter of the light spot	< 75 cm at 150 m
Ambient light limit	> 80000 Lux
Resolution	0.1 mm , adjustable
Temperature influence	0.03 mm/K
Functional safety related parameters	
$MTTF_d$	> 100 a

Release date: 2026-09-16 Date of issue: 2026-09-16 Filename: 324444-100007_eng.pdf

Technical Data

Mission Time (T_M)		10 a
Diagnostic Coverage (DC)		0 %
Indicators/operating means		
Function indicator		10 LEDs
Control elements		Control panel (4 membrane keys) for setting parameters
Parameterization indicator		Illuminated display for displaying measured values and parameterization
Electrical specifications		
Operating voltage	U_B	10 ... 30 V DC
No-load supply current	I_0	660 mA (18 V) ... 400 mA (30 V)
Time delay before availability	t_v	< 10 s
Interface		
Interface type		PROFINET
Physical		Ethernet
Transfer rate		100 MBit/s
Read out rate		1000/s
Conformity		
Product standard		EN 60947-5-2
Laser safety		EN 60825-1:2014
Measurement accuracy		
Measured value output		1 ms
Average data age		3 ms , 6 ms , 12 ms , 25 ms , adjustable
Absolute accuracy		typ. ± 2.5 mm
Repeat accuracy		< 1 mm
Approvals and certificates		
Protection class		III
UL approval		cULus Listed, Class 2 Power Source, Type 1 enclosure
FDA approval		IEC 60825-1:2014 Complies with 21 CFR 1040.10 and 1040.11 except for conformance with IEC 60825-1 Ed. 3 as described in Laser Notice 56, dated May 8, 2019.
Ambient conditions		
Ambient temperature		-10 ... 60 °C (14 ... 140 °F)
Storage temperature		-40 ... 75 °C (-40 ... 167 °F)
Relative humidity		95 % , no moisture condensation
Mechanical specifications		
Degree of protection		IP67
Connection		4-pin, M12x1 connector, A-coded (supply) , 2x 4-pin, M12x1 socket, D-coded (LAN)
Material		
Housing		ABS / PC
Optical face		PMMA , hard coated
Mass		approx. 300 g
Dimensions		
Height		106.6 mm
Width		55 mm
Depth		80.6 mm

Release date: 2026-09-16 Date of issue: 2026-09-16 Filename: 324444-100007_eng.pdf

Connection Assignment

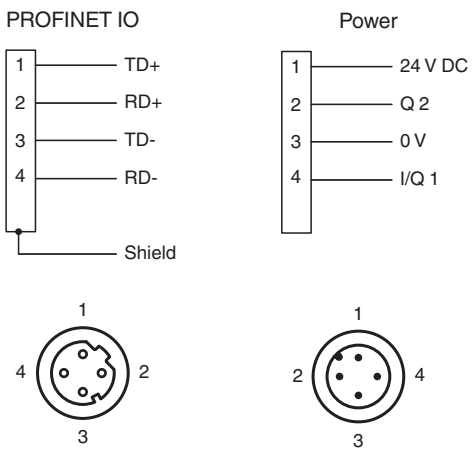

Assembly

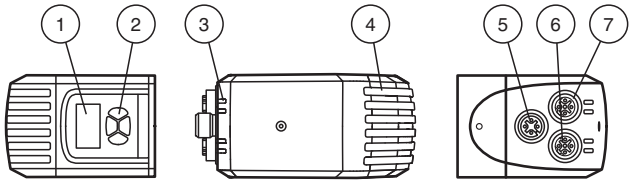

1	Display
2	Buttons
3	LEDs 4x
4	LEDs 6x
5	Connector 1, PWR
6	Connector 2, PROFINET IO
7	Connector 3, PROFINET IO

Mounting

Beam divergence R1000

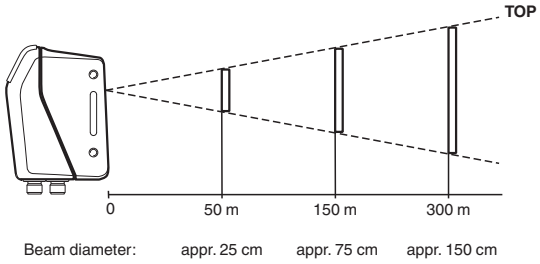

Reflector arrangement R1000

Release date: 2026-09-16 Date of issue: 2026-09-16 Filename: 324444-100007_eng.pdf

Mounting

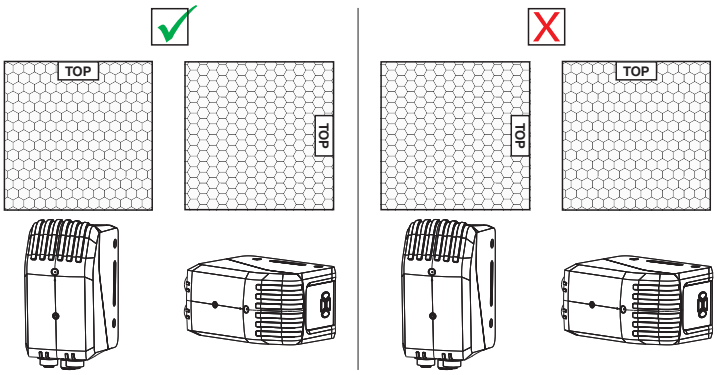

Release date: 2026-09-16 Date of issue: 2026-09-16 Filename: 324444-100007_eng.pdf