Type X and Ex pxb purge and pressurization control unit

BEBCO EPS®

6000 Control System

- Certified for Class I, Class II, Division I; Zone 1 / Zone 21 to nonhazardous
- Intrinsically safe electrical/pneumatic manifold assembly
- Intrinsically safe user interface for programming and monitoring the system
- Enclosure volume up to 450 ft^3 (12.7 m^3)
- Control Unit monitors system operation and controls enclosure power
- Universal mounting (brackets included)
- 316L stainless steel Type 4X enclosure

6000 Series Type X and Ex pxb purge and pressurization system control unit

Function

The 6000 series consists of the control unit (EPCU)and user interface(UIC) mounted in a 316L stainless steel Type 4X (IP66) enclosure with the pneumatic solenoid valve mounted on the unit. The EPV-6000 relief vent is separate and is mounted to the enclosure.
The user interface allows programming of up to 4 switch inputs, temperature modules, enclosure power contacts, 2 auxiliary outputs, and various operational functions. Also, the user interface screen allows monitoring and easy configuration.
Among the additional features are inputs for system bypass, enclosure power on/off, temperature overload and activation of Rapid Exchange flow for cooling or auxiliary relay for separate cooling source, and delay power shutdown.
Component kits are available for custom installations.

Connection

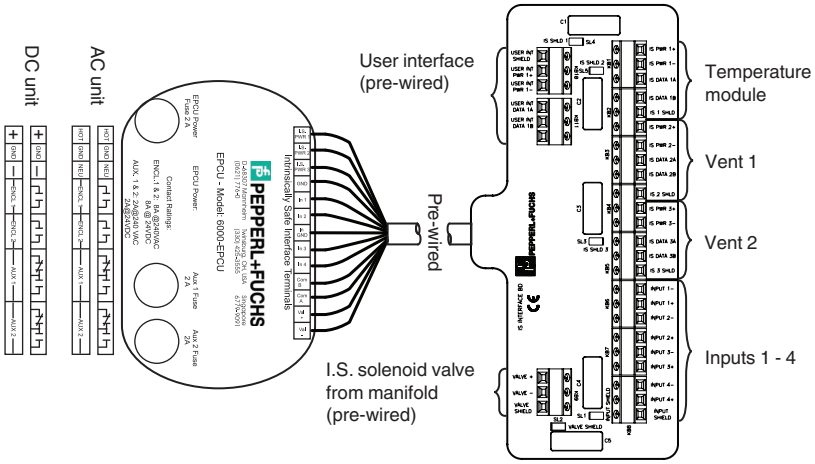

Release date: 2024-10-01 Date of issue: 2024-10-01 Filename: 514685_eng.pdf

Dimensions

Main Control Unit

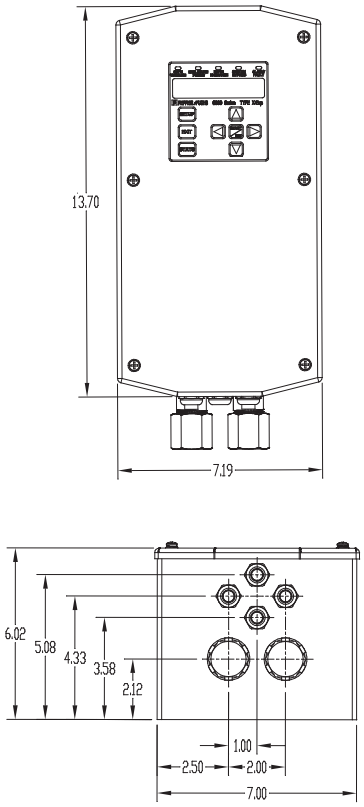

EPCU with Ex Enclosure for Component Kit

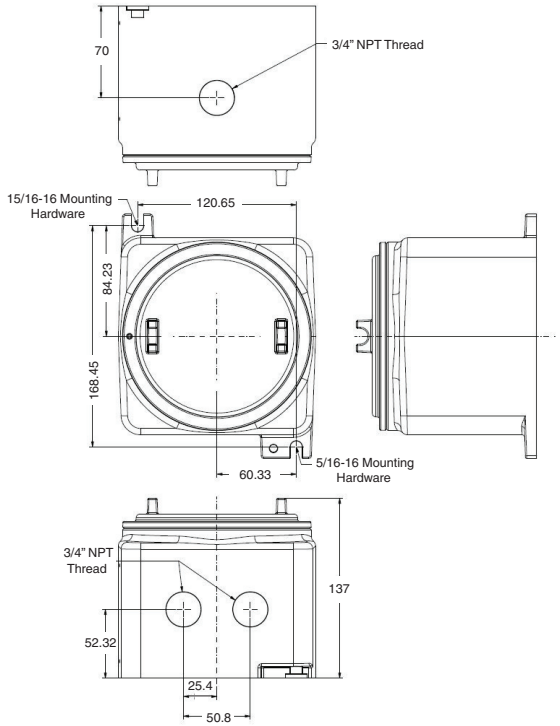

User Interface for Component Kit

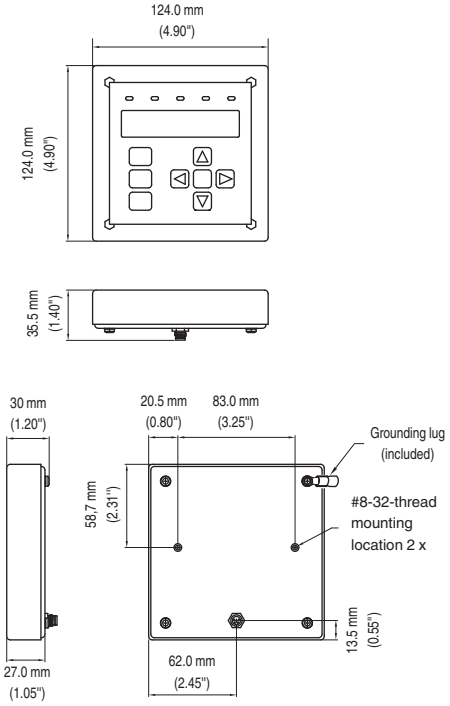

Manifold for Component Kit

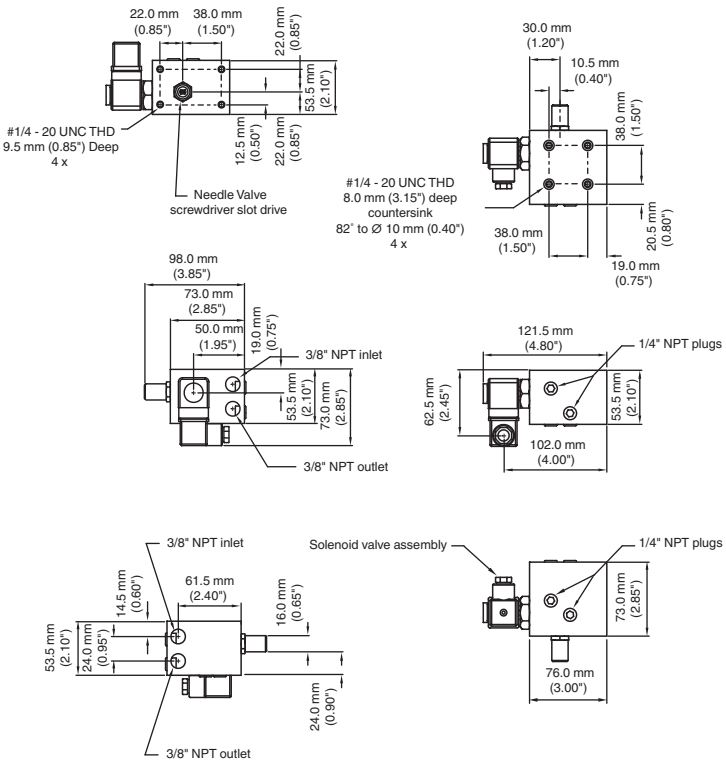

Release date: 2024-10-01 Date of issue: 2024-10-01 Filename: 514685_eng.pdf

Technical Data

General specifications		
Operating mode		manual, semi-automatic, or fully automatic - programmable
Series		6000 Series
System		Type X Purge ; Ex pxb Purge
Number of volume exchanges		4 to 19
Hazardous environment		gas, dust, gas and dust
Supply		
Rated voltage	U_r	90 ... 264 V AC, 48 ... 62 Hz / 0.2 A 20 ... 30 V DC
Electrical specifications		
Connection		Terminal blocks
Input		
Input I		Inputs 1, 2, 3, 4: contact input, 5 VDC @ 2 mA
Input type		intrinsically safe
Input II		Temperature inputs
Input type		intrinsically safe
Sensor type		6000-TEMP
Input III		EPV-6000 Vent
Input type		intrinsically safe
Input IV		User interface module
Connection		M8 connector, 4-pin
Input type		intrinsically safe
Output		
Output I		AUX 1
Output type		Dry contacts, SPDT
Inrush current		5 A
Contact loading		2 A @ 240 VAC resistive load 2 A @ 24 VDC
Output II		AUX 2
Output type		Dry contacts, SPDT
Inrush current		5 A
Contact loading		2 A @ 240 VAC resistive load 2 A @ 24 VDC
Output III		ENC_1, ENC_2 (protected enclosure contacts)
Output type		Dry contacts (2) SPST, NO
Contact loading		8 A @ 240 VAC / 120 VAC resistive load 8 A @ 24 VDC
Indicators/settings		
LED indication		Safe pressure: Blue - safe pressure is achieved Enclosure power: Green - power on; Red - power off Rapid exchange: Blue - purging is running System bypass: Yellow - bypass is activated Alarm fault: Red (blinking) - any alarm input detected; Red (solid) - 6000 series system fault
Pneumatic parameters		
Protective gas supply		instrument grade air or inert gas
Pressure requirement		20 ... 120 psig (1.4 ... 8.3 bar) (138 ... 827 kPa) regulated
Safe pressure		Gas: 0.25" wc (6.4 mm wc) (0.625 mbar) (62 Pa) Dust: 0.65" wc (16.5 mm wc) (1.6 mbar) (162 Pa) Gas and Dust: 0.65" wc (16.5 mm wc) (1.6 mbar) (162 Pa)
Purge flow rate		Maximum flow rate measurement for enclosure size (enclosure volume:flow rate): < 20 ft^3 (0.57 m^3): 5, 12 SCFM (141, 340 l/min), or dynamic 20 ... 30 ft^3 (0.57 ... 0.85 m^3): 5, 12, 20 SCFM (141, 340, 565 l/min), or dynamic > 30 ft^3 (0.85 m^3): 5, 12, 20, 30 SCFM (141, 340, 565, 850 l/min), or dynamic

Release date: 2024-10-01 Date of issue: 2024-10-01 Filename: 514685_eng.pdf

Technical Data

Purge flow and enclosure pressure rate	With EPV-6000-xx-01, EPV-6000-xx-02 5 SCFM @ 1.5" wc, (141 l/min @ 3.7 mbar) 12 SCFM @ 2.0" wc, (340 l/min @ 5.0 mbar) 20 SCFM @ 2.7" wc, (565 l/min @ 6.7 mbar) 30 SCFM @ 4.1" wc, (850 l/min @ 10.2 mbar) With EPV-6000-xx-03, EPV-6000-xx-04 5 SCFM @ 2.1" wc, (141 l/min @ 5.2 mbar) 12 SCFM @ 2.6" wc, (340 l/min @ 6.5 mbar) 20 SCFM @ 4.1" wc, (565 l/min @ 10.2 mbar) 30 SCFM @ 5.3" wc, (850 l/min @ 13.2 mbar) With EPV-6000-xx-05, 06 5 SCFM @ 1.8" wc, (141 l/min @ 4.5 mbar) 12 SCFM @ 2.9" wc, (340 l/min @ 7.3 mbar) 20 SCFM @ 7.4" wc, (565 l/min @ 18.5 mbar)
Flow rate for leakage compensation	Depends on enclosure seal. With EPV-6000-xx-01, EPV-6000-xx-02 0.35 SCFM @ 0.25" wc (10.0 l/min @ 6.3 mbar) 1.0 SCFM @ 0.75" wc (28.0 l/min @ 1.9 mbar) With EPV-6000-xx-03, EPV-6000-xx-04 0.22 SCFM @ 0.25" wc (6.2 l/min @ 6.3 mbar) 0.58 SCFM @ 0.75" wc (16.4 l/min @ 1.9 mbar) With EPV-6000-xx-05, EPV-6000-xx-06 0.15 SCFM @ 0.25" wc (4.2 l/min @ 6.3 mbar) 0.35 SCFM @ 0.75" wc (10.0 l/min @ 1.9 mbar)
Ambient conditions	
Ambient temperature	-20 ... 60 °C (-4 ... 140 °F)
Storage temperature	-30 ... 80 °C (-22 ... 176 °F)
Relative humidity	5 ... 95 %, noncondensing
Vibration resistance	5 ... 100 Hz , 1 g, 12 m/s², all axes
Impact resistance	30 g, 11 ms, all axes
Mechanical specifications	
Connection type	Pneumatic : Inlet fitting to manifold: 3/8" ferrule fitting Outlet fitting from manifold: 3/8" ferrule fitting Inlet fitting to enclosure: 3/8" bulkhead fitting
Cable gland	4 - M16 x 1.5 cable gland
Degree of protection	Type 4X , IP66
Material	Enclosure: 316L (UNS S31603) stainless steel Manifold valve: anodized 6082 aluminum Fittings: 316L (UNS S31603) stainless steel
Mass	-WH- 11.4 kg (25 lb) -CK- 7.2 kg (16 lb)
Dimensions	183 x 367.5 x 152.5 mm (7.20 x 14.45 x 6.00 inch)
Height	367.5 mm
Width	183 mm
Depth	152.5 mm
Data for application in connection with hazardous areas	
EU-type examination certificate	
Marking	6000 main control unit with housing 6000-xx-S2-UN-xx-xx: ATEX UL/Demko 07 ATEX 0705753X II 2 G Ex db ib [ib Gb] [pxb Gb] IIC T4 Gb (-20 °C ≤ Ta ≤ 60 °C) II 2 D Ex ib tb [ib Db] [pxb Db] IIIC T60°C Db (-20 °C ≤ Ta ≤ 50 °C) 6000 main control unit kit version 6000-xx-S2-UN-CK-xx: ATEX UL/Demko 07 ATEX 0705753X II 2 G Ex db [ib Gb] [pxb Gb] IIC T4 Gb (-20 °C ≤ Ta ≤ 60 °C) II 2 D Ex tb [ib Db] [pxb Db] IIIC T80°C Db (-20 °C ≤ Ta ≤ 60 °C) User interface 6000-UIC-xx: ATEX UL/Demko 07 ATEX 0705753X II 2 G Ex ib [pxb Gb] IIC T4 Gb
Directive conformity	
Directive 2014/34/EU	IEC/EN 60079-0 IEC/EN 60079-1 IEC/EN 60079-2 IEC/EN 60079-11 IEC/EN 60079-31
Directive 94/9/EC	
International approvals	

Release date: 2024-10-01 Date of issue: 2024-10-01 Filename: 514685_eng.pdf

Technical Data

UL approval	6000 Main control unit with housing 6000-xx-S2-UN-xx-xx: cULus Class I, Division 1, Groups A,B,C,D T4 (-20 °C ≤ Ta ≤ 60 °C) Class II, Division 1, Groups E,F,G T4 (-20 °C ≤ Ta ≤ 50 °C) Class I, Zone 1, Group IIC T4 (-20 °C ≤ Ta ≤ 60 °C) Class II, Zone 21, Group IIIC T60 °C (-20 °C ≤ Ta ≤ 50 °C) [Ex i] Associated Equipment Ex db ib [ib Gb] [pxb Gb] IIC T4 (-20 °C ≤ Ta ≤ 60 °C) Ex ib tb [ib Db] [pxb Db] IIIC T4 (-20 °C ≤ Ta ≤ 50 °C) 6000 Main control unit kit version 6000-xx-S2-UN-CK-xx: cULus Class I, Division 1, Groups A,B,C,D T4 (-20 °C ≤ Ta ≤ 60 °C) Class II, Division 1, Groups E,F,G T4 (-20 °C ≤ Ta ≤ 60 °C) Class I, Zone 1, Group IIC T4 Class II, Zone 21, Group IIIC T60 °C [Ex i] Associated Equipment Ex db [ib Gb] [pxb Gb] IIC T4 X (-20 °C ≤ Ta ≤ 60 °C) Ex tb [ib Db] [pxb Db] IIIC T4 X (-20 °C ≤ Ta ≤ 60 °C) User interface 6000-UIC-xx: cULus (-20 °C ≤ Ta ≤ 60 °C) Class I, Division 1, Groups A,B,C,D T4 Class I, Zone 1, Group IIC T4 Ex i Intrinsically safe
IECEx approval	6000 Main Control unit with housing 6000-xx-S2-UN-xx-xx: IECEx UL 08.0003X Ex db ib [ib Gb] [pxb Gb] IIC T4 Gb (-20 °C ≤ Ta ≤ 60 °C) Ex ib tb [ib Db] [pxb Db] IIIC T60 °C Db (-20 °C ≤ Ta ≤ 50 °C) 6000 Main control unit kit version 6000-xx-S2-UN-CK-xx: IECEx UL 08.0003X Ex db [ib Gb] [pxb Gb] IIC T4 Gb (-20 °C ≤ Ta ≤ 60 °C) Ex tb [ib Db] [pxb Db] IIIC T80 °C Db (-20 °C ≤ Ta ≤ 60 °C) User interface 6000-UIC-xx: IECEx UL 08.0003X Ex ib [pxb Gb] IIC T4 Gb
General information	
Supplementary information	EC-Type Examination Certificate, Statement of Conformity, Declaration of Conformity, Attestation of Conformity and instructions have to be observed where applicable. For information see www.pepperl-fuchs.com.

Release date: 2024-10-01 Date of issue: 2024-10-01 Filename: 514685_eng.pdf

Assembly

Release date: 2024-10-01 Date of issue: 2024-10-01 Filename: 514685_eng.pdf

Type Code

6	0	0	0	-	D	V	-	S	2	-	U	N	-	W	H	-	A	C

Voltage requirement

AC	100 - 250 VAC
DC	20 - 30 VDC

Connection style

WH	with stainless steel housing
CK	component kit
XD	with Ex de coupling

Valve type

DV	digital solonoid valve
NV	no valve

Release date: 2024-10-01 Date of issue: 2024-10-01 Filename: 514685_eng.pdf