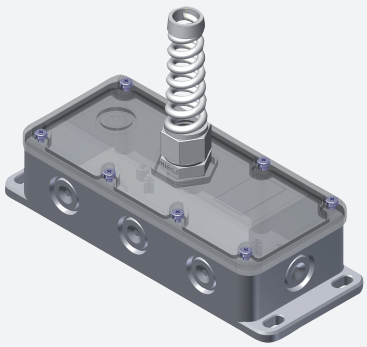

Junction box

LAD 4 / Modul 1

- large terminal compartment
- high degree of protection (IP66)
- impact-resistant plastic
- 90° cable outlet
- pre-formed cable glands

Junction box

Dimensions

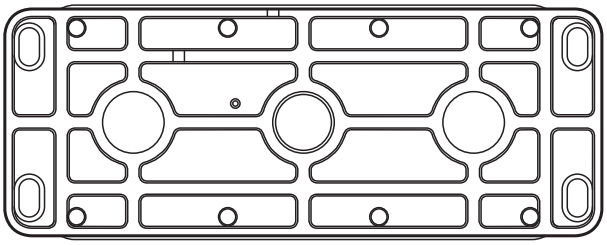

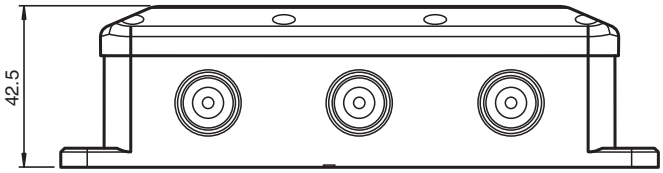

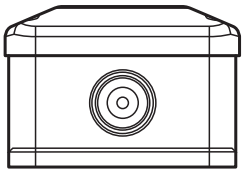

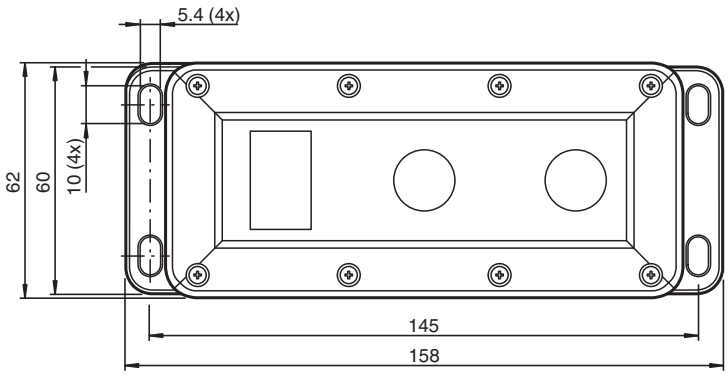

Technical Data

General specifications	
Marking	CE
Mechanical specifications	
Degree of protection	IP66

Release date: 2026-08-24 Date of issue: 2026-08-31 Filename: 64315300_eng.pdf

Technical Data

Connection		spring terminal, 5-pin, white Cable cross section 2.5 mm^2
Material		
Housing		ABS, UL94 HB light gray
Mass		approx. 180 g
Dimensions		
Height		62 mm
Width		158 mm
Depth		43 mm

Release date: 2026-08-24 Date of issue: 2026-08-31 Filename: 64315300_eng.pdf