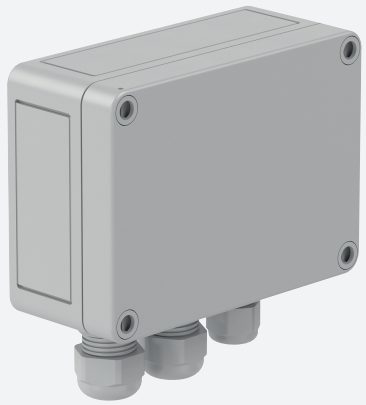

Safety control unit

AOS 3024-W

WITTSensoric

- Safety control unit
- Signaling contacts with wiper function
- one OSE input
- force-guided safety relay
- Power/function indicator LEDs

Safety control unit

Dimensions

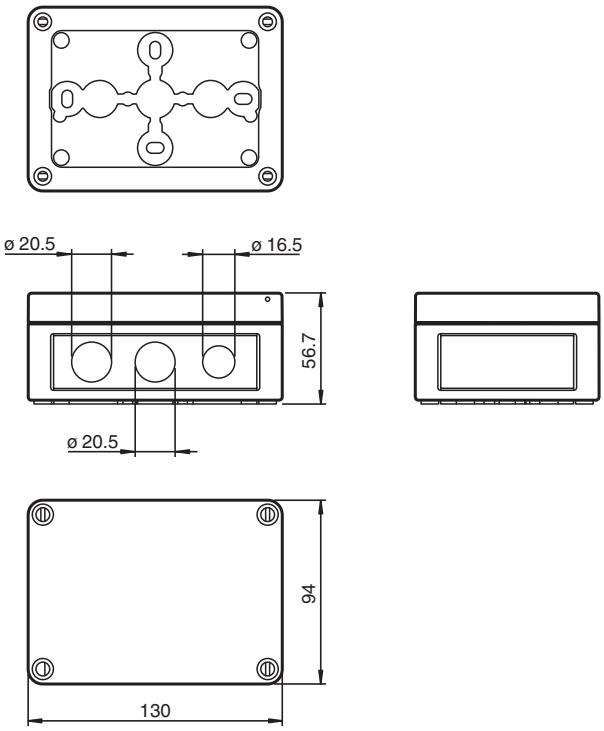

Technical Data

General specifications		
Marking		CE
Indicators/operating means		
Operation indicator		LED green: power on
Function indicator		LED yellow: safety loop has been interrupted LED green: Safety loop closed
Electrical specifications		
Operating voltage	U_B	24 V AC/DC ± 10 %
Power consumption	P_0	max. 6 VA
Output		

Release date: 2024-07-01 Date of issue: 2024-07-08 Filename: 64319579_eng.pdf

Technical Data

Output type	relay, NO contact
Switching voltage	250 V AC / 50 V DC
Switching current	max. 1.25 A
Energized/De-energized delay	typ. 500 ms
Response time	≤ 20 ms
Output 1	
Output type	Signal output change-over contact
Switching voltage	250 V AC / 50 V DC
Switching current	max. 1.25 A
Response time	< 20 ms
Conformity	
Functional safety	ISO 13849-1 , Cat. 3 PL d
Product standard	EN 61000-6-2, EN 61000-6-3
Ambient conditions	
Ambient temperature	-25 ... 60 °C (-13 ... 140 °F)
Storage temperature	-25 ... 65 °C (-13 ... 149 °F)
Mechanical specifications	
Degree of protection	IP66 according to EN 60529
Connection	screw terminals , lead cross section 2 x 1 mm^2
Material	
Housing	Polycarbonate
Mass	400 g
Dimensions	
Height	95 mm
Width	130 mm
Depth	57 mm

Release date: 2024-07-01 Date of issue: 2024-07-08 Filename: 64319579_eng.pdf