Junction box

LAD 2

- Compact design
- Degree of protection IP65
- impact-resistant plastic
- MODULE 2 and 3 PCB can be installed

Junction box

Dimensions

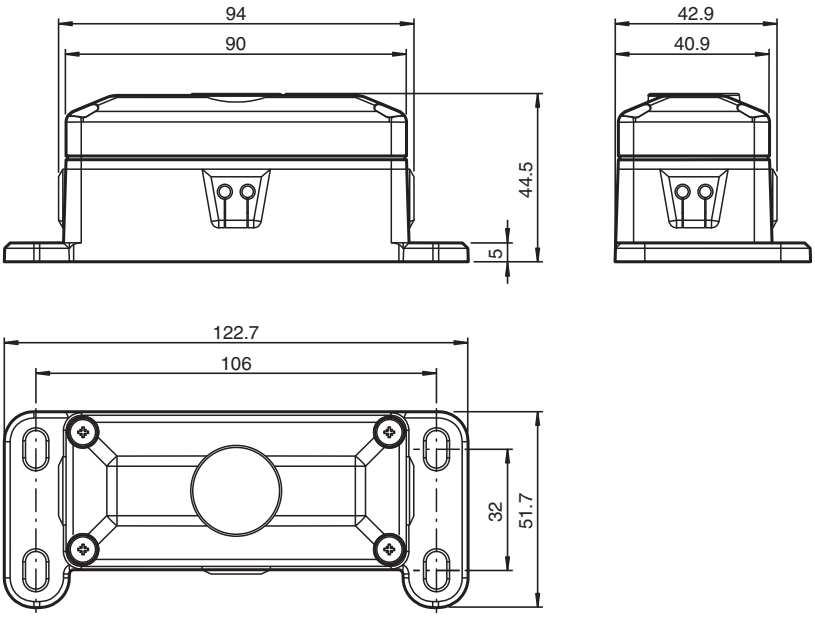

Technical Data

General specifications	
Marking	CE
Mechanical specifications	
Degree of protection	IP65
Connection	screw terminals , lead cross section 2 x 1 mm^2
Material	
Housing	PA 6 GF30 black or light gray
Mass	approx. 100 g
Dimensions	

Release date: 2024-07-01 Date of issue: 2024-07-08 Filename: 64321774_eng.pdf

Technical Data

Height	52 mm
Width	123 mm
Depth	45 mm

Release date: 2024-07-01 Date of issue: 2024-07-08 Filename: 64321774_eng.pdf