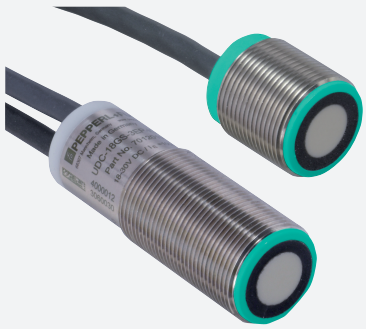

Double Sheet Sensor Kit

UDC-18GS-3EP-IO-0,2M-V19-P001

- Ultrasonic system for reliable detection of no, one, or two overlapping sheet materials
- Insensitive to printing, colors, and shining surfaces
- Very wide material spectrum, finest papers up to thin sheet metals as well as plastic- and metal foils
- Perpendicular or inclined sensor mounting relative to the sheet plane possible
- Integrated alignment aid
- IO-Link Interface for process data, parameterization and diagnosis
- Synchronization options
- No teach-in required
- Short version
- Customer-specific configuration
- Extension cable for UDB... and UDC...

Double sheet sensor kit consisting of a double sheet sensor with IO-Link interface and 1 m transmitter-receiver extension cable

Function

The ultrasonic double-sheet detector is used wherever automatic differentiation between single and double sheets is necessary to protect machines or prevent rejects. The double sheet detection is based on the ultrasonic thru-beam principle.

The following situations can be detected:

- No sheet, i. e. air
- Single sheet
- Double sheet or multiple sheets (a statement on the number of sheets is not possible here)

The signals are evaluated by a microprocessor system. As a result of the evaluation, corresponding switching outputs are set and the result of the evaluation is communicated via the IO-Link interface.

Dimensions

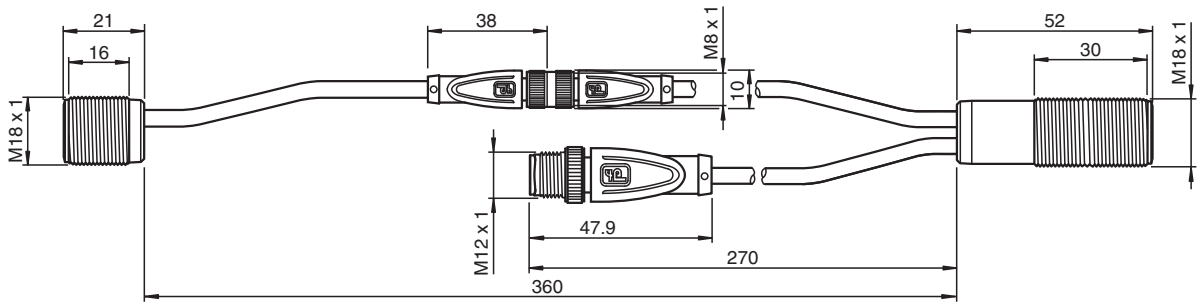

Technical Data

General specifications	
Sensing range	20 ... 60 mm , optimal distance: 45 mm
Transducer frequency	approx. 255 kHz
Memory	
Non-volatile memory	EEPROM
Write cycles	300000
Indicators/operating means	
LED green	indication: single sheet detected flashing (1 Hz) - standby mode flashing with short break (1 Hz) - IO-Link mode

Release date: 2025-03-18 Date of issue: 2025-03-18 Filename: 70120101-100007_eng.pdf

Technical Data

LED yellow		indication: no sheet detected (Air)
LED red		indication: double sheet detected flashing: device error
Electrical specifications		
Operating voltage	U_B	18 ... 30 V DC , ripple 10 $\%_{SS}$
No-load supply current	I_0	≤ 40 mA
Power consumption	P_0	≤ 550 mW
Time delay before availability	t_v	≤ 300 ms
Interface		
Interface type		IO-Link
IO-Link revision		1.1
Device profile		Identification and Diagnosis - I&D
Process data		Input: 16 Bit - measurement value 8 Bit - selected threshold set 2 Bit - switching signals 3 Bit output: 8 Bit - threshold set 2 Bit - disable transducer 1 Bit
Vendor ID		1 (0x0001)
Device ID		3148289 (0x300A01)
Transfer rate		COM2 (38.4 kBit/s)
Min. cycle time		2.8 ms
SIO mode support		yes
Compatible master port type		Class A (use adapter cable listed in accesories) Class B (use 3-pole adapter or 3-wire cable)
Input/Output 1		
Designation		SYNC
Input/output type		1 synchronization connection, bidirectional
0 Level		0 ... 1 V
1 Level		2.5 V ... U_B
Input impedance		> 22 kΩ
Output current		current source < 2.5 mA
Pulse length		0.4 ... 3 ms with external control, low active
Synchronization frequency		
Common mode operation		≤ 230 Hz
Multiplex operation		≤ 230 Hz /n, n = number of sensors , n ≤ 10
Input/Output 2		
Designation		IN2/FEEDBACK
Input/output type		input or output programmable via IO-Link : input for selection of a threshold set (factory default) output as feedback output
Input type		digital input
Signal		0-level: 0 ... + 1V 1-level: +U_B - 1 V ... +U_B
Input impedance		≥ 60 kΩ
Pulse length		≥ 100 ms
Output type		PNP
Rated operating current	I_e	8 mA
Voltage drop		< 3 V
Fusing		reverse polarity protected , overload and short-circuit protected
Input		
Designation		IN1/TEACH
Input type		0-level: 0 ... + 1V 1-level: +U_B - 1 V ... +U_B
Pulse length		≥ 100 ms
Impedance		≥ 60 kΩ

Release date: 2025-03-18 Date of issue: 2025-03-18 Filename: 70120101-100007_eng.pdf

Technical Data

Output		
Designation		OUT 1 ... 3
Number		3
Output function		OUT 1: single sheet detected OUT 2: double sheet detected OUT 3: no sheet detected (air)
Output type		Push-pull (4 in 1) output , NO contact (programmable)
Rated operating current	I_e	100 mA per output
Voltage drop	U_d	≤ 3 V
Switch-on delay	t_{on}	15 ms (programmable)
Switch-off delay	t_{off}	15 ms (programmable)
Pulse extension		can be activated (100 ms or IO-Link cycle time)
Fusing		reverse polarity protected , overload and short-circuit resistant
Compliance with standards and directives		
Standard conformity		
Standards		EN IEC 60947-5-2:2020 IEC 60947-5-2:2019 IEC 61131-9 / IO-Link V1.1.3
Approvals and certificates		
UL approval		cULus Listed, General Purpose, Class 2 Power Source
CCC approval		CCC approval / marking not required for products rated ≤36 V
Ambient conditions		
Ambient temperature		0 ... 60 °C (32 ... 140 °F)
Storage temperature		-25 ... 70 °C (-13 ... 158 °F)
Mechanical specifications		
Connection type		fixed cable with plug
Housing length ultrasonic		
Ultrasonic transmitter		21 mm
Ultrasonic receiver		52 mm
Housing diameter ultrasonic		
Ultrasonic transmitter		18 mm
Ultrasonic receiver		18 mm
Degree of protection		IP65
Material		
Housing		Stainless steel 1.4305/AISI 303, polyamide plastic parts
Transducer		epoxy resin/hollow glass sphere mixture; polyurethane foam
Connector		
Threading		M12 x 1
Number of pins		8
Cable		
Cable diameter		4.3 mm
Bending radius		5 x diameter , fixed installation
Material		PUR
Color		black
Length	L	approx. 200 mm
Mass		75 g
Tightening torque, fastening screws		max. 20 Nm

Release date: 2025-03-18 Date of issue: 2025-03-18 Filename: 70120101-100007_eng.pdf

Connection

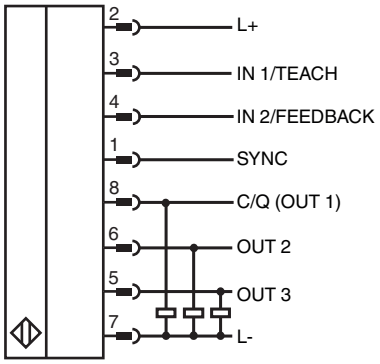

Connection Assignment

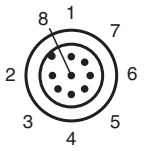

Installation

Note
Only use the cables specified by Pepperl+Fuchs for this purpose to extend the connecting cable between the transmitter and receiver of the ultrasonic double sheet detectors. The use of other cables will result in impairment of the sensor function or even loss of function.

Mounting

Mounting/Adjustment

Recommended distances

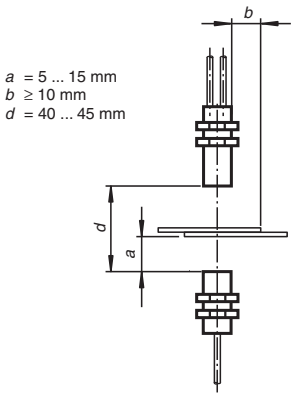

Release date: 2025-03-18 Date of issue: 2025-03-18 Filename: 70120101-100007_eng.pdf

Mounting

Mounting/Adjustment

(for very thick papers)

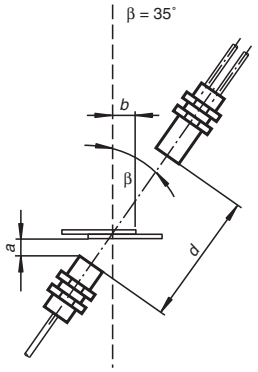

Angular misalignment

α < +/- 1°

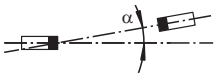

Sensor offset

s < +/- 1 mm

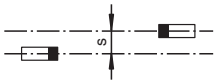

Commissioning

Operating Modes

The measured object is a material inserted between the emitter and receiver. The sensor measures the damping of the emitted ultrasonic signal caused by the material.
The residual amplitude of the ultrasonic signal arriving at the receiver is evaluated in relation to the set threshold values and assigned to the corresponding state (="air", "single sheet" or "double sheet"). The detected state is reported back via the switching outputs of the sensor and via the IO-Link process data. In the IO-Link process data, the measured amplitude is also made available as an analog value.
Depending on the application, the sensor can be operated in the following ways:

1. By selecting one of the 3 implemented threshold sets, each covering a very wide range of materials. The respective thresholds are preset but adjustable.
2. By teaching in a specific material or a specific material constellation for multi-layer materials.
3. In permanent IO-Link operation, a completely separate evaluation of the amplitude values measured by the sensor can be performed in the downstream, user-side controller in addition or as an alternative to the two aforementioned options.

Further Documentation

For detailed information on mounting, alignment and commissioning you may refer to the commissioning instruction of the sensor.

The sensor manual is also available as detailed overall documentation.
You can access the documents mentioned via the product detail page at www.pepperl-fuchs.com.

Kit component

	UDC-18GS-3EP-IO-0,2M-V19	Double sheet sensor
	V31-GM-1M-PUR-V31-GM-UDB/UDC	Cordset M8 socket straight to M8 plug straight A-coded, 4-pin, PUR cable 3-core black, shielded

Release date: 2025-03-18 Date of issue: 2025-03-18 Filename: 70120101-100007_eng.pdf