Coupling

ACC-CSP-50262S1-1212

- Universally suitable for backlash-free rotation transmission
- Highly vibration-isolating
- Well misalignment compensation
- Low torsion spring stiffness
- Small reset forces
- No movable parts
- Very rugged construction

Spring steel coupling with length 50 mm, for shaft diameter d1 = 12 mm, d2 = 12 mm

Dimensions

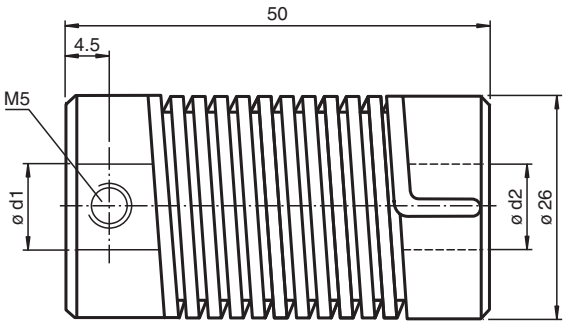

Technical Data

Ambient conditions	
Operating temperature	-40 ... 150 °C (-40 ... 302 °F)
Mechanical specifications	
Shaft diameter	d1 = 12 mm , d2 = 12 mm
Material	
Spring	spring steel (1.1200), nickel plated
End piece	Stainless steel 1.4305 / AISI 303
Mass	130 g
Rotational speed	max. 3000 min
Max. torque	1.5 Nm
Tightening torque, fastening screws	1.2 Nm
Radial offset	max. ± 1.5 mm
Axial offset	max. ± 1 mm
Angle error	max. ± 5 °
Torsion angle	at torque 0.75 Nm drive shaft view
CW rotation direction	40 °
CCW rotation direction	60 °

Release date: 2024-09-11 Date of issue: 2024-09-11 Filename: 70120104-100028_eng.pdf

Technical Data

Moment of inertia	129 kg m^2 x 10^{-7}
Mounting	clamp screws M5 x 6, DIN 916
Tightening torque of clamping screws	max. 3 Nm

Release date: 2024-09-11 Date of issue: 2024-09-11 Filename: 70120104-100028_eng.pdf