Optical reading head

PGV100RS-F213-B12-0.7M-V1

- Mechanically rugged: no wearing parts, long operating life, maintenance-free
- TCP/IP protocol over ethernet
- Non-contact positioning on Data Matrix code tape
- Visible red light
- Fixed cable
- Timestamp of the image capture
- Synchronization option

Read head for incident light positioning system

Dimensions

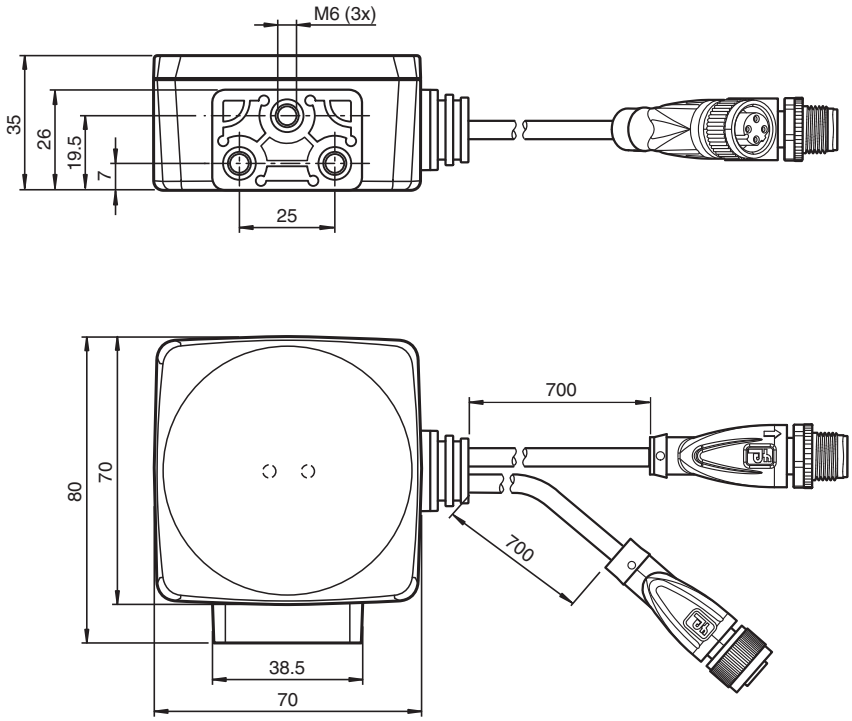

Technical Data

General specifications		
Passage speed	v	≤ 8 m/s
Measuring length		max. 10000 m
Light type		Integrated LED lightning (red)
Scan rate		100 s^{-1}
Latency		20 ms
Read distance		100 mm
Depth of focus		± 30 mm
Reading field		120 mm x 80 mm
Resolution		0.2 mm

Release date: 2026-07-21 Date of issue: 2026-07-21 Filename: 70122726-100005_eng.pdf

Technical Data

Ambient light limit		100000 Lux
Accuracy		± 0.4 mm
Nominal ratings		
Camera		
Type		CMOS , Global shutter
Processor		
Clock pulse frequency		600 MHz
Speed of computation		4800 MIPS
Digital resolution		32 Bit
Functional safety related parameters		
$MTTF_d$		144 a
MTBF		72 a
Mission Time (T_M)		20 a
Diagnostic Coverage (DC)		0 %
Indicators/operating means		
LED indication		2 LEDs
Electrical specifications		
Operating voltage	U_B	15 ... 30 V DC , PELV
No-load supply current	I_0	max. 200 mA
Power consumption	P_0	max. 4.8 W
Interface		
Interface type		Ethernet
Protocol		TCP/IP
Transfer rate		max. 100 MBit/s
Dielectric strength		± 16 V
Output		
Output type		2 switch outputs, PNP
Switching voltage		Operating voltage
Switching current		max. 100 mA
Output resistance		30 kΩ
Conformity		
Shock resistance		EN 60068-2-27:2009
Vibration resistance		EN 60068-2-6:2008
Emitted interference		EN 61000-6-4:2007+A1:2011
Noise immunity		EN 61000-6-2:2005
Photobiological safety		exempt group according to EN 62471:2008
Standard conformity		
Emitted interference		EN 61000-6-4:2007+A1:2011
Noise immunity		EN 61000-6-2:2005+AC:2005
Shock resistance		EN 60068-2-27:2009
Vibration resistance		EN 60068-2-6:2008
Approvals and certificates		
CE conformity		CE
UKCA conformity		UKCA
UL approval		cULus Listed, Class 2 Power Source, Type 1 enclosure
CCC approval		CCC approval / marking not required for products rated ≤36 V
Ambient conditions		
Operating temperature		0 ... 60 °C (32 ... 140 °F) , -20 ... 60 °C (-4 ... 140 °F) (noncondensing; prevent icing on the lens!)
Storage temperature		-40 ... 85 °C (-40 ... 185 °F)
Relative humidity		90 % , noncondensing
Mechanical specifications		
Connection type		1 x fixed cable for supply voltage, M12 x 1, 4-pin 1 x fixed cable with Ethernet socket, M12 x 1, 4-pin, D-coded

Release date: 2026-07-21 Date of issue: 2026-07-21 Filename: 70122726-100005_eng.pdf

Technical Data

Degree of protection		IP54
Material		
Housing		PC/ABS
Cable		PUR
Cable		
Sheath diameter		4.8 mm
Strain relief		60 N
Length	L	0.7 m
Mass		approx. 200 g
Dimensions		
Height		70 mm
Width		70 mm
Depth		35 mm
Factory settings		
X resolution (protocol)		0.1 mm
Y resolution (protocol)		0.1 mm
Angle resolution		0.1 °
Function input/output 2		Illumination controll
Function input/output 3		Sync out

Connection Assignment

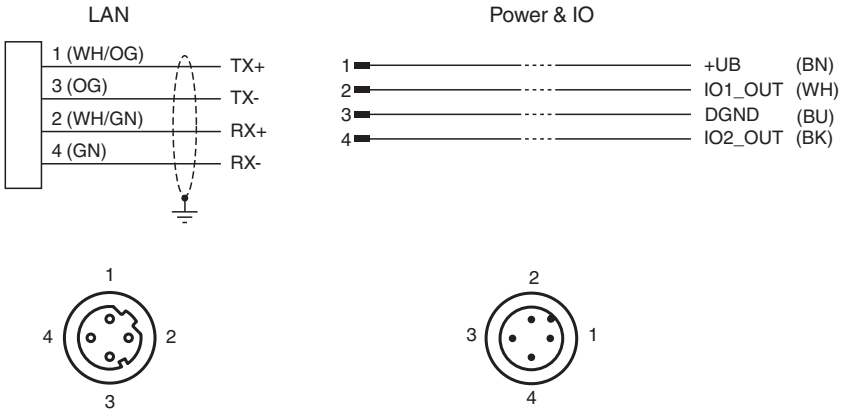

Function Principle

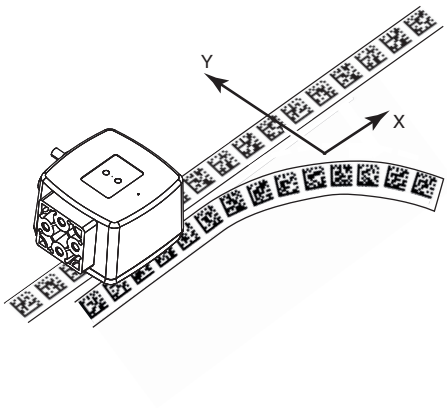

Release date: 2026-07-21 Date of issue: 2026-07-21 Filename: 70122726-100005_eng.pdf

Function Principle

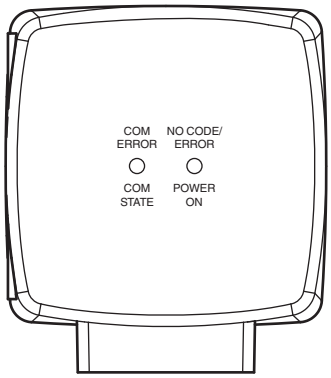

Release date: 2026-07-21 Date of issue: 2026-07-21 Filename: 70122726-100005_eng.pdf