Triangulation sensor (BGS)

OBT120-R3-E0-P

- Ultra-small housing design
- 45° cable outlet for maximum mounting freedom under extremely tight space constraints
- Highly visible light spot, even on dark materials
- Precision object detection, almost irrespective of the color
- Adjustable sensing range

Triangulation sensor with background suppression for standard applications, miniature design, 120 mm adjustable sensing range, red light, light on, NPN output, fixed cable

Function

The nano sensor has been developed for a broad range of applications. It offers excellent durability and is exceptionally easy to install. The housing is compact and, with its 45° cable outlet, can be installed in the smallest spaces. New functional principles and functionality open up a range of new options.

Dimensions

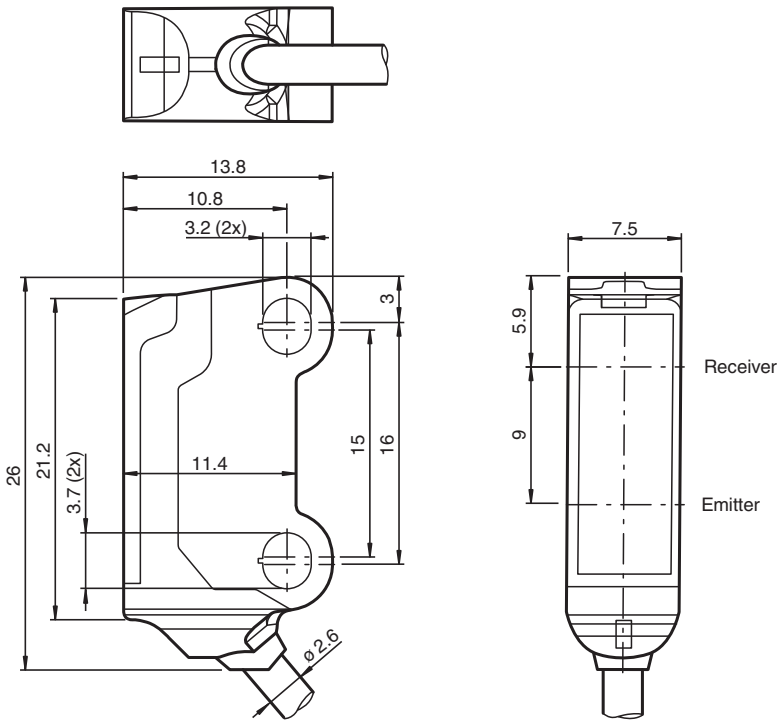

Technical Data

General specifications	
Detection range	1 ... 120 mm
Detection range min.	1 ... 20 mm
Detection range max.	1 ... 120 mm
Adjustment range	20 ... 120 mm

Release date: 2024-07-26 Date of issue: 2024-07-26 Filename: 70134005_eng.pdf

Technical Data

Reference target		standard white, 100 mm x 100 mm
Light source		LED
Light type		modulated visible red light
LED risk group labelling		exempt group
Black-white difference (6 %/90 %)		< 10 % at 120 mm
Diameter of the light spot		approx. 10 mm at a distance of 120 mm
Opening angle		approx. 6 °
Optical face		frontal
Ambient light limit		EN 60947-5-2 : 5000 Lux
Functional safety related parameters		
$MTTF_d$		782 a
Mission Time (T_M)		20 a
Diagnostic Coverage (DC)		0 %
Indicators/operating means		
Operation indicator		LED green: Power on flashing (approx. 4 Hz) Short circuit/overload indication
Function indicator		LED yellow ON: lights when object is detected Start teach in: LED green/yellow in-phase flashing 2.5 Hz End teach in: LED green/yellow alternate flashing 2.5 Hz
Electrical specifications		
Operating voltage	U_B	12 ... 24 V DC , class 2
No-load supply current	I_0	< 25 mA
Protection class		III
Input		
Control input		external Teach-In
Output		
Switching type		NPN normally open / light on
Signal output		1 NPN output, short-circuit protected, reverse polarity protected, open collector
Switching voltage		max. 24 V DC
Switching current		max. 50 mA , resistive load
Voltage drop	U_d	≤ 1.5 V DC
Switching frequency	f	approx. 500 Hz
Response time		1000 µs
Conformity		
Product standard		EN 60947-5-2
Approvals and certificates		
UL approval		E87056 , cURus Recognized Class 2 power source
CCC approval		CCC approval / marking not required for products rated ≤36 V
Ambient conditions		
Ambient temperature		-25 ... 55 °C (-13 ... 131 °F)
Storage temperature		-30 ... 70 °C (-22 ... 158 °F)
Mechanical specifications		
Degree of protection		IP67
Connection		2 m fixed cable
Material		
Housing		PC/ABS and TPU
Optical face		Plastic
Cable		PUR
Mass		approx. 18 g
Dimensions		
Height		26 mm
Width		7.5 mm
Depth		13.8 mm
Cable length		2 m

Release date: 2024-07-26 Date of issue: 2024-07-26 Filename: 70134005_eng.pdf

Connection

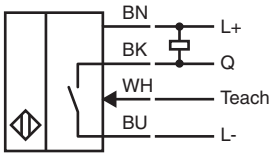

Indication

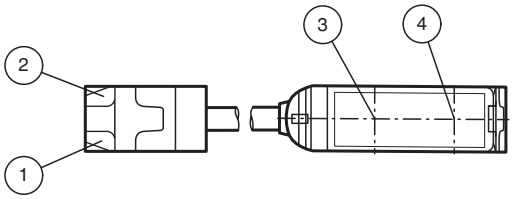

1	Operation indicator	green
2	Signal indicator	yellow
3	Emitter	
4	Receiver	

Characteristic Curve

Characteristic response curve

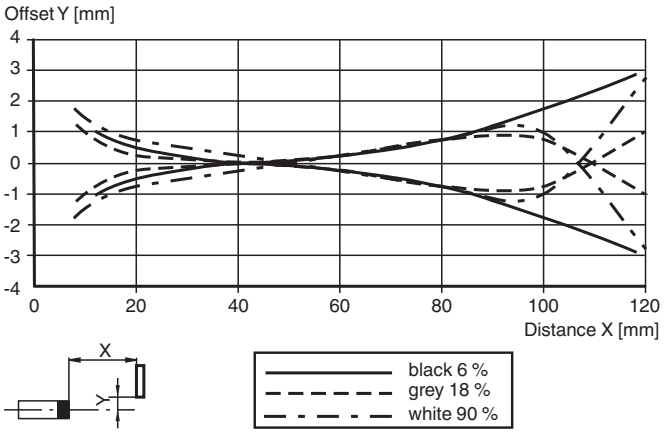

Detection ranges

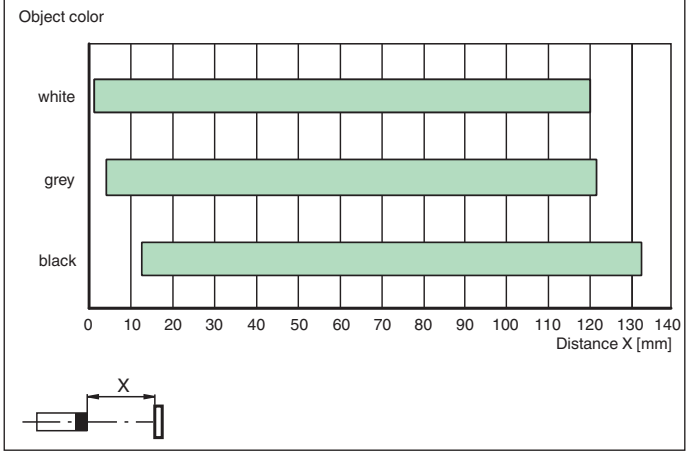

Release date: 2024-07-26 Date of issue: 2024-07-26 Filename: 70134005_eng.pdf

Characteristic Curve

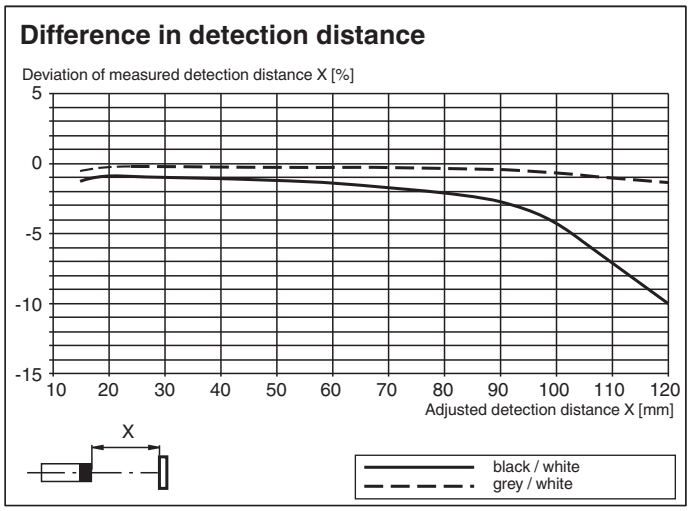

Release date: 2024-07-26 Date of issue: 2024-07-26 Filename: 70134005_eng.pdf