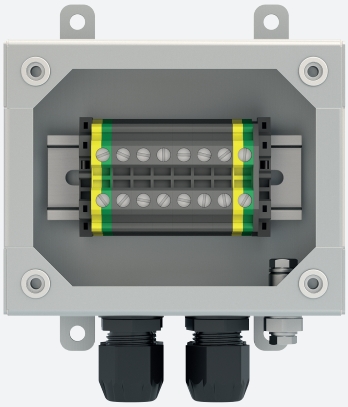

Junction Box Ex e, Stainless Steel

SR.TJE.11.14.09.B.0-S0002

- 136 x 110 x 86 mm
- Stainless Steel AISI 316L
- Installation in Zone 1, Zone 2, Zone 21 and Zone 22
- Bottom face cable glands polyamide, 4x M20

Terminal and Junction Boxes Ex e / Ex i with Return Flange, Stainless Steel

Dimensions

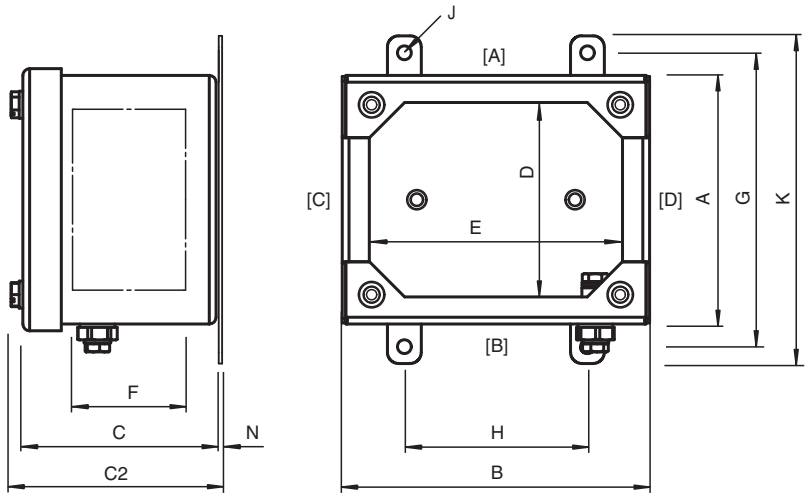

Dimension values see data table.
Image and drawing are generic for this device type and may deviate from the specific variant.

Technical Data

Electrical specifications	
Operating voltage	352 V AC / DC max. for ATEX / IECEx
Operating current	see instruction manuals
Mechanical specifications	
Enclosure cover	fully detachable
Cover fixing	Stainless steel A4 (V4A) combination pozi driv and slotted screw
Screws	M6
Number	4
Tightening torque	3 Nm - 3.5 Nm
Cover seal	silicone
Degree of protection	IP66
Cable entry	thru-holes direct through body
Cable entry face B	
M20 quantity	4
M20 series	Cable Glands, Plastic

Release date: 2026-01-15 Date of issue: 2026-01-15 Filename: 70142756_eng.pdf

Technical Data

M20 type	CG.PEDS1.M20.*
M20 clamping range	6 ... 12 mm
Terminal assembly	
Rail orientation	horizontal
Number of vertical rails	
Number of horizontal rails	1
Terminal type	6 x UT 6 2 x UT 6 PE
Terminal capacity	6 mm^2
Material	
Enclosure	1.5 mm AISI 316L, (1.4404) stainless steel
Finish	brushed
Mass	approx. 1 kg
Shock resistance	IK09, IK10
Dimensions	
External dimension (A)	110 mm
External dimension (B)	136 mm
External dimension (C)	87 mm
External dimension with screws (C2)	92 mm
Internal dimension (D)	112 mm
Internal dimension (E)	86 mm
Internal dimension (F)	66 mm
Mounting holes distance (G)	130 mm
Mounting holes distance (H)	81 mm
Mounting holes diameter (J)	6 mm
Thickness of mounting brackets (N)	8.5 mm
Maximum external dimension (K)	145 mm
Mounting	4 screws
Grounding	M6 internal/external brass nickel-plated grounding bolt
Ambient conditions	
Ambient temperature	-40 ... 60 °C (-40 ... 140 °F)
Data for application in connection with hazardous areas	
EU-type examination certificate	CML 20 ATEX 3156X
Marking	Ⓔx II 2 GD Ex eb IIC T* Gb, Ex tb IIIC T** Db T6/T80 °C @ Ta +40 °C T4/T130 °C @ Ta +60 °C
International approvals	
IECEx approval	IECEx CML 20.0094X
UKCA approval	CML 21 UKEX 3892X
Further approvals	further on request
Conformity	
Degree of protection	EN60529
Shock resistance	EN IEC 62262
CE marking	0102
General information	
Ordering information	This device will be delivered completely configured and assembled ready for use. For configuration details please contact Customer Service.
Supplementary information	EC-Type Examination Certificate, Statement of Conformity, Declaration of Conformity, Attestation of Conformity and instructions have to be observed where applicable. For information see www.pepperl-fuchs.com.
Accessories	
Optional accessories	M6 internal/external stainless steel grounding bolt

Release date: 2026-01-15 Date of issue: 2026-01-15 Filename: 70142756_eng.pdf