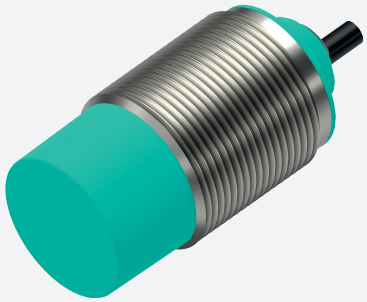

Inductive sensor

NAN20-30GM50-U

- Inductive analog sensor
- Output 0 V ... 10 V
- Measuring range 0 ... 20 mm
- Non-flush mountable
- Flexible use with versatile mounting opportunities

Inductive distance sensor with analog voltage output

Dimensions

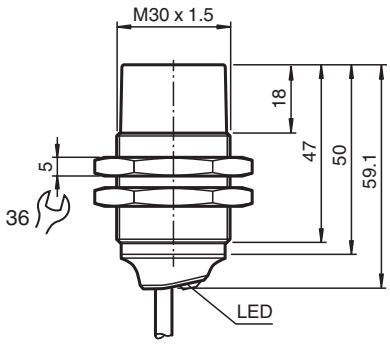

Technical Data

General specifications		
Output type		Analog voltage output
Installation		non-flush
Output polarity		DC
Actuating element		mild steel, e. g. 1.0037, SR235JR (formerly St37-2) 60 mm x 60 mm x 1 mm
Measuring range		0 ... 20 mm
Output type		3-wire
Nominal ratings		
Operating voltage	U_B	15 ... 30 V
Reverse polarity protection		reverse polarity protected
Short-circuit protection		current limited
Linearity error		± 3 % of full-scale value
Temperature drift		± 10 % of full-scale value
Repeat accuracy		± 1 % of full-scale value
Recovery time		≤ 50 ms
No-load supply current	I_0	12 mA
Status indicator		LED, yellow permanently on: damping element within measuring range slowly flashing (2 Hz): damping element outside measuring range fast flashing (10 Hz): fault state
Safety-relevant product characteristics		

Release date: 2026-03-27 Date of issue: 2026-03-27 Filename: 70145056-0044_eng.pdf

Technical Data

$MTTF_d$		918 a
Mission Time (T_M)		20 a
Diagnostic Coverage (DC)		0 %
Analog output		
Output type		0 ... 10 V
Slope of output characteristic		0.5 V / mm
Load resistor		≥ 500 Ω
Settling time		≤ 100 ms
Conformity		
PWIS conformity		VDMA 24364-C1/T100°C-W
Compliance with standards and directives		
Standard conformity		
Standards		EN IEC 60947-5-2 EN IEC 60947-5-7
Approvals and certificates		
Protection class		II
Rated insulation voltage	U_i	30 V
Rated impulse withstand voltage	U_{imp}	500 V
UL approval		cULus Listed Load Type: General Purpose Circuitry: Class 2 Power Source Enclosure Type Rating: Type 1 Supply/Switching Voltage: 30 V DC
CCC approval		CCC approval / marking not required for products rated ≤36 V
Ambient conditions		
Ambient temperature		-25 ... 70 °C (-13 ... 158 °F)
Storage temperature		-40 ... 85 °C (-40 ... 185 °F)
Mechanical specifications		
Connection type		cable
Housing material		brass , white bronze coated
Sensing face		PBT , green
Degree of protection		IP65/IP67/IP68
Cable		
Wire end ferrules		yes
Cable diameter		4.3 mm ± 0.15 mm
Bending radius		> 10 x cable diameter
Material		PVC
Color		black
Number of cores		3
Core cross section		0.34 mm^2
Length	L	2 m
Mass		172 g
Dimensions		
Length		59 mm
Diameter		30 mm
Mounting		with nuts, M30
Tightening torque		≤ 30 Nm
General information		
Scope of delivery		2 self locking nuts in scope of delivery

Release date: 2026-03-27 Date of issue: 2026-03-27 Filename: 70145056-0044_eng.pdf

Connection Assignment

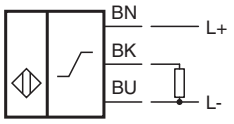

Characteristic Curve

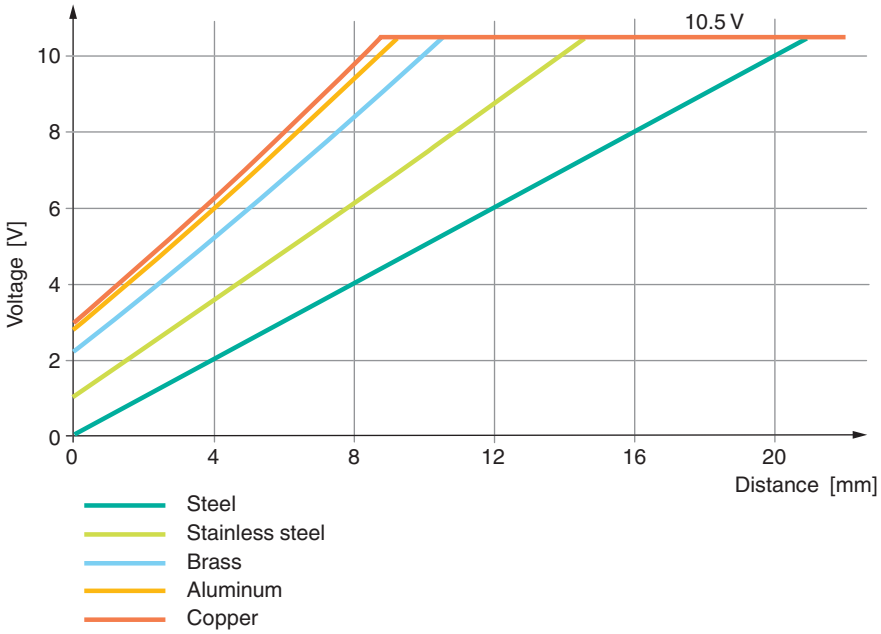

Release date: 2026-03-27 Date of issue: 2026-03-27 Filename: 70145056-0044_eng.pdf