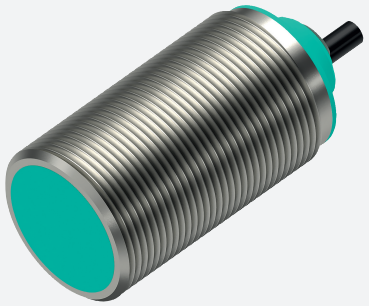

Inductive sensor

NAB10-30GM50-I

- Inductive analog sensor
- Output 4 mA ... 20 mA
- Measuring range 0 ... 10 mm
- Flush mounting
- Flexible use with versatile mounting opportunities

Inductive distance sensor with analog current output

Dimensions

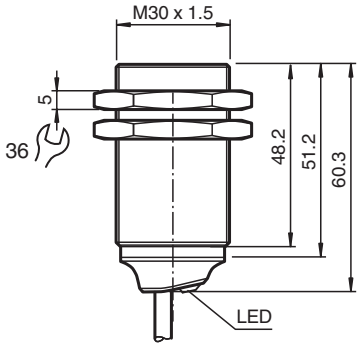

Technical Data

General specifications		
Output type		Analog current output
Installation		flush
Output polarity		DC
Actuating element		mild steel, e. g. 1.0037, SR235JR (formerly St37-2) 30 mm x 30 mm x 1 mm
Measuring range		0 ... 10 mm
Output type		3-wire
Nominal ratings		
Operating voltage	U_B	15 ... 30 V
Reverse polarity protection		reverse polarity protected
Short-circuit protection		current limited
Linearity error		± 3 % of full-scale value
Temperature drift		± 10 % of full-scale value
Repeat accuracy		± 1 % of full-scale value
Recovery time		≤ 50 ms
No-load supply current	I_0	12 mA
Status indicator		LED, yellow permanently on: damping element within measuring range slowly flashing (2 Hz): damping element outside measuring range fast flashing (10 Hz): fault state
Safety-relevant product characteristics		

Release date: 2026-02-26 Date of issue: 2026-02-26 Filename: 70145056-0046_eng.pdf

Technical Data

$MTTF_d$		929 a
Mission Time (T_M)		20 a
Diagnostic Coverage (DC)		0 %
Analog output		
Output type		4 ... 20 mA
Slope of output characteristic		2 mA / mm
Load resistor		≤ 500 Ω
Settling time		≤ 100 ms
Conformity		
PWIS conformity		VDMA 24364-C1/T100°C-W
Compliance with standards and directives		
Standard conformity		
Standards		EN IEC 60947-5-2 EN IEC 60947-5-7
Approvals and certificates		
Protection class		II
Rated insulation voltage	U_i	30 V
Rated impulse withstand voltage	U_{imp}	500 V
UL approval		cULus Listed Load Type: General Purpose Circuitry: Class 2 Power Source Enclosure Type Rating: Type 1 Supply/Switching Voltage: 30 V DC
CCC approval		CCC approval / marking not required for products rated ≤36 V
Ambient conditions		
Ambient temperature		-25 ... 70 °C (-13 ... 158 °F)
Storage temperature		-40 ... 85 °C (-40 ... 185 °F)
Mechanical specifications		
Connection type		cable
Housing material		brass , white bronze coated
Sensing face		PBT , green
Degree of protection		IP65/IP67/IP68
Cable		
Wire end ferrules		yes
Cable diameter		4.3 mm ± 0.15 mm
Bending radius		> 10 x cable diameter
Material		PVC
Color		black
Number of cores		3
Core cross section		0.34 mm^2
Length	L	2 m
Mass		193 g
Dimensions		
Length		60 mm
Diameter		30 mm
Mounting		with nuts, M30
Tightening torque		≤ 30 Nm
General information		
Scope of delivery		2 self locking nuts in scope of delivery

Release date: 2026-02-26 Date of issue: 2026-02-26 Filename: 70145056-0046_eng.pdf

Connection Assignment

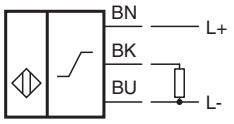

Characteristic Curve

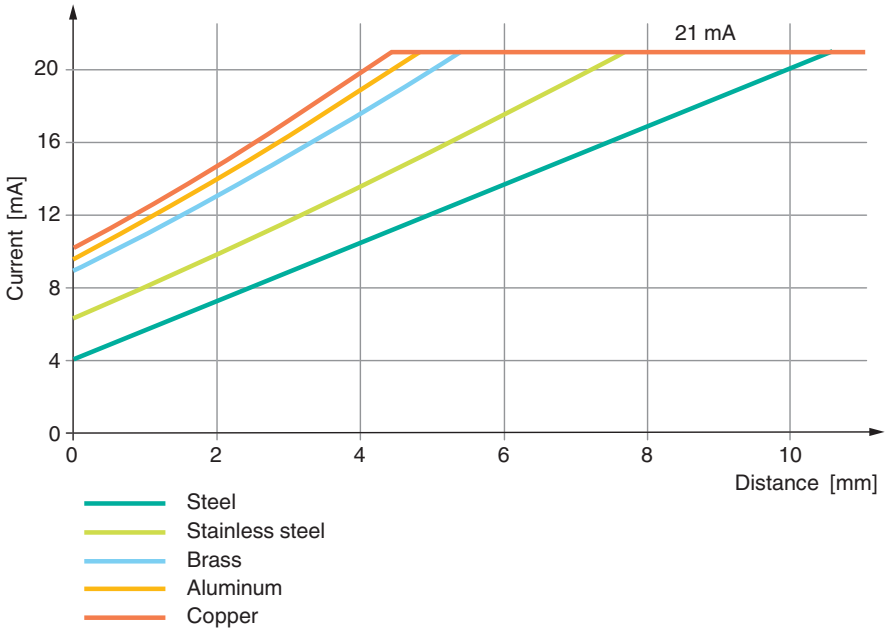

Release date: 2026-02-26 Date of issue: 2026-02-26 Filename: 70145056-0046_eng.pdf