SMART Transmitter Power Supply

HiC2025

- 1-channel isolated barrier
- 24 V DC supply (bus powered)
- Input for 2-wire SMART transmitters and current sources
- Output for 4 mA ... 20 mA or 1 V ... 5 V
- Low power dissipation
- Up to SIL 2 (SC 3) acc. to IEC/EN 61508

Function

This isolated barrier is used for intrinsic safety applications.
The device supplies 2-wire transmitters in the hazardous area, and can also be used with current sources.
It transfers the analog input signal to the safe area as an isolated current value.
Bi-directional communication is supported for SMART transmitters that use current modulation to transmit data and voltage modulation to receive data.
The output is selected as a current source, current sink, or voltage source via DIP switches.
This device mounts on a HiC Termination Board.

Application

The device supports the following SMART protocols:

- HART
- BRAIN

Wiring Diagram

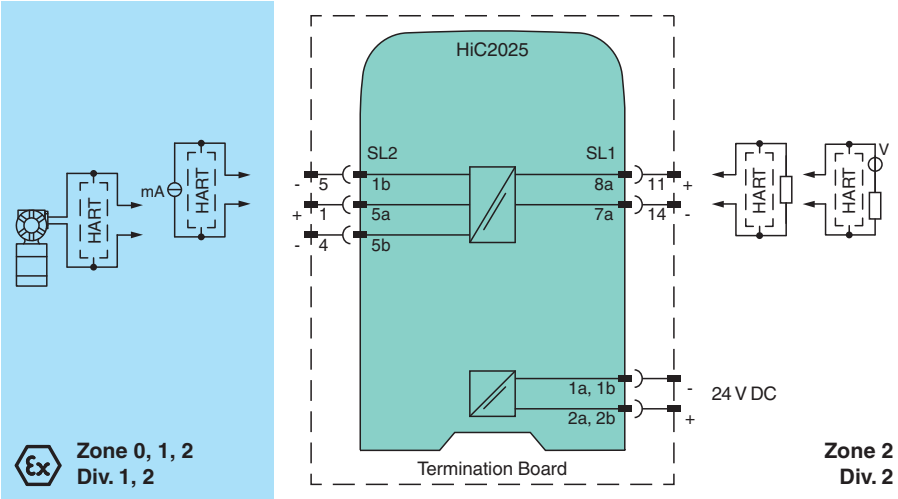

Technical Data

General specifications	
Signal type	Analog input

Release date: 2026-07-22 Date of issue: 2026-07-22 Filename: 70150447_eng.pdf

Technical Data

Functional safety related parameters		
Safety Integrity Level (SIL)		SIL 2
Systematic capability (SC)		SC 3
Supply		
Connection		SL1: 1a, 1b(-); 2a, 2b(+)
Rated voltage	U_r	19 ... 30 V DC bus powered via Termination Board
Ripple		≤ 10 %
Rated current	I_r	≤ 45 mA at 24 V and 20 mA source mode output
Power dissipation		≤ 800 mW
Power consumption		≤ 1.1 W
Input		
Connection side		field side
Connection		SL2: 5a(+), 1b(-); 5a(+), 5b(-)
Input signal		4 ... 20 mA limited to approx. 26 mA
Voltage drop		approx. 5 V on SL2: 5a(+), 1b(-)
Available voltage		≥ 15 V at 20 mA , ≥ 18 V at 4 mA on SL2: 5a(+), 5b(-)
Output		
Connection side		control side
Connection		SL1: 8a(+), 7a(-)
Load		0 ... 350 Ω (source mode)
Output signal		source mode: 4 ... 20 mA or 1 ... 5 V (internal resistor: 250 Ω, 0.1 %) sink mode: 4 ... 20 mA, operating voltage 10 ... 30 V For additional internal or external loads the voltage drop has to be considered, e. g. 250 Ω x 20 mA = 5 V.
Ripple		20 mV_{rms}
Transfer characteristics		
Deviation		at 20 °C (68 °F) < 0.1 % of full scale, incl. non-linearity and hysteresis (source mode and sink mode 4 ... 20 mA) ≤ ± 0.2 % incl. non-linearity and hysteresis (source mode 1 ... 5 V)
Influence of ambient temperature		< 2 µA/K (-20 ... 70 °C (-4 ... 158 °F)); < 4 µA/K (-40 ... -20 °C (-40 ... -4 °F)) (source mode and sink mode 4 ... 20mA) < 0.5 mV/K (-20 ... 70 °C (-4 ... 158 °F)); < 1 mV/K (-40 ... -20 °C (-40 ... -4 °F)) (source mode 1...5 V)
Frequency range		field side into the control side: bandwidth with 0.5 V_{pp} signal 0 ... 3 kHz (-3 dB) control side into the field side: bandwidth with 0.5 V_{pp} signal 0 ... 3 kHz (-3 dB)
Settling time		≤ 50 ms
Rise time/fall time		≤ 10 ms
Galvanic isolation		
Input/Output		safe electrical isolation acc. to IEC/EN 60079-11, voltage peak value 375 V
Input/power supply		safe electrical isolation acc. to IEC/EN 60079-11, voltage peak value 375 V
Output/power supply		basic insulation according to IEC/EN 61010-1, rated insulation voltage 60 V_{eff}
Indicators/settings		
Display elements		LED
Control elements		DIP switch
Factory setting		output: current source
Configuration		via DIP switches
Labeling		space for labeling at the front
Directive conformity		
Electromagnetic compatibility		
Directive 2014/30/EU		EN 61326-1:2013 (industrial locations)
Conformity		
Electromagnetic compatibility		NE 21:2017 EN 61326-3-2:2018 For further information see system description.
Degree of protection		IEC 60529:2001
Protection against electrical shock		UL 61010-1:2018

Release date: 2026-07-22 Date of issue: 2026-07-22 Filename: 70150447_eng.pdf

Technical Data

Ambient conditions		
Ambient temperature		-40 ... 70 °C (-40 ... 158 °F)
Mechanical specifications		
Degree of protection		IP20
Mass		approx. 100 g
Dimensions		12.5 x 106 x 128 mm (0.5 x 4.2 x 5.1 inch) (W x H x D)
Mounting		on termination board
Coding		pin 1 and 3 trimmed For further information see system description.
Data for application in connection with hazardous areas		
EU-type examination certificate		CESI 06 ATEX 017
Marking		Ⓔx II (1)G [Ex ia Ga] IIC Ⓔx II (1)D [Ex ia Da] IIIC Ⓔx I (M1) [Ex ia Ma] I
Input		Ex ia
Supply		
Maximum safe voltage	U_m	250 V AC (Attention! U_m is no rated voltage.)
Equipment		SL2: 5a(+), 5b(-)
Voltage	U_o	25.2 V
Current	I_o	100 mA
Power	P_o	630 mW
Internal capacitance	C_i	5.7 nF
Internal inductance	L_i	negligible
Equipment		SL2: 5a(+), 1b(-)
Voltage	U_i	30 V
Current	I_i	128 mA
Power	P_i	1000 mW
Voltage	U_o	7.2 V
Current	I_o	100 mA
Power	P_o	25 mW
Internal capacitance	C_i	5.7 nF
Internal inductance	L_i	negligible
Certificate		CESI 19 ATEX 027 X
Marking		Ⓔx II 3G Ex ec IIC T4 Gc
Directive conformity		
Directive 2014/34/EU		EN IEC 60079-0:2018+AC:2020 , EN IEC 60079-11:2024 , EN IEC 60079-7:2015/A1:2018
International approvals		
FM approval		
FM certificate		FM 19 US 0122 X , FM 19 CA 0065 X
Control drawing		116-0470 (cFMus)
UL approval		E106378
Control drawing		116-0458 (cULus)
IECEx approval		
IECEx certificate		IECEx CES 06.0002X
IECEx marking		[Ex ia Ga] IIC , [Ex ia Da] IIIC , [Ex ia Ma] I Ex ec IIC T4 Gc
General information		
Supplementary information		Observe the certificates, declarations of conformity, instruction manuals, and manuals where applicable. For information see www.pepperl-fuchs.com.

Release date: 2026-07-22 Date of issue: 2026-07-22 Filename: 70150447_eng.pdf

Assembly

Front view

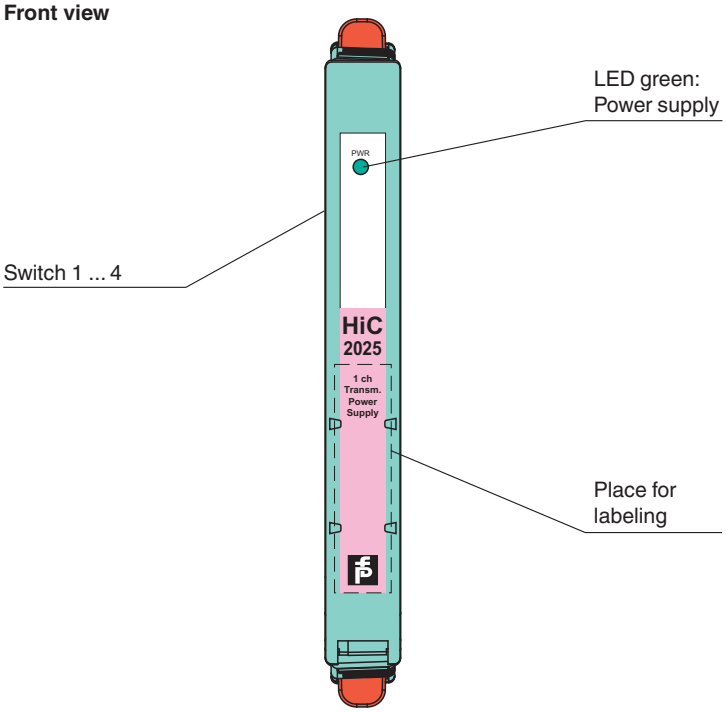

Safety Information

The pins for this device are trimmed to polarize it according to its safety parameter. Do not change this setting!
For further information see system manual.

Configuration

Configure the device in the following way:
- Push the red Quick Lok Bars on each side of the device in the upper position.
- Remove the device from termination board.
- Set the switches according to the figure in the **Configuration** section.

Release date: 2026-07-22 Date of issue: 2026-07-22 Filename: 70150447_eng.pdf

Configuration

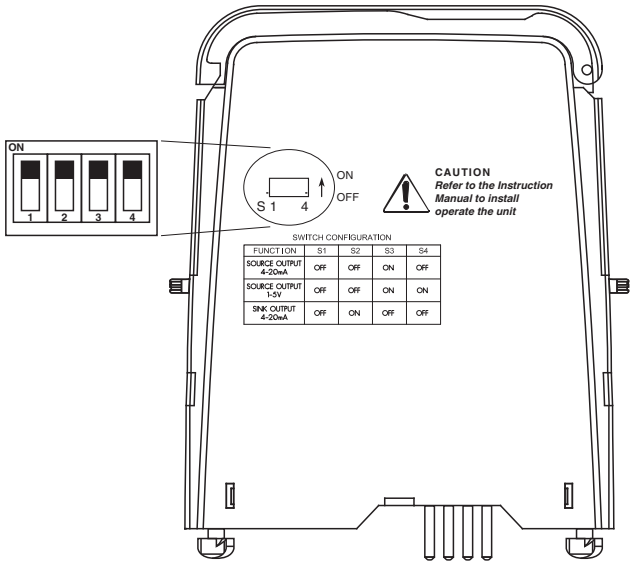

Switch position

Function	S1	S2	S3	S4
Current source 4 mA ... 20 mA	OFF	OFF	ON	OFF
Voltage source 1 V ... 5 V	OFF	OFF	ON	ON
Current sink 4 mA ... 20 mA	OFF	ON	OFF	OFF

Factory setting: current source 4 mA ... 20 mA

Release date: 2026-07-22 Date of issue: 2026-07-22 Filename: 70150447_eng.pdf