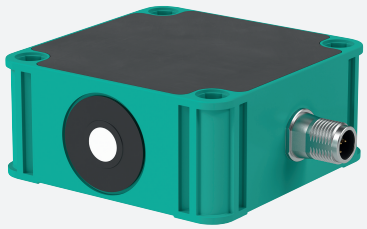

# Ultrasonic sensor

# UB500-F42S-U-V15

- Analog output 0 ... 10 V
- Selectable sound lobe width
- TEACH-IN
- Synchronization options
- Degree of protection IP67

Ultrasonic sensor with 1 analog output in cubic design

## Function

The ultrasonic sensor combines versatility with a wide range of functions and a universal measuring principle.
Thanks to the simple sensor synchronization when using several sensors at the same time, interference-free operation of your system is possible.
The adjustable sound beam width enables optimal adaptation to your application without loss of range.

## Dimensions

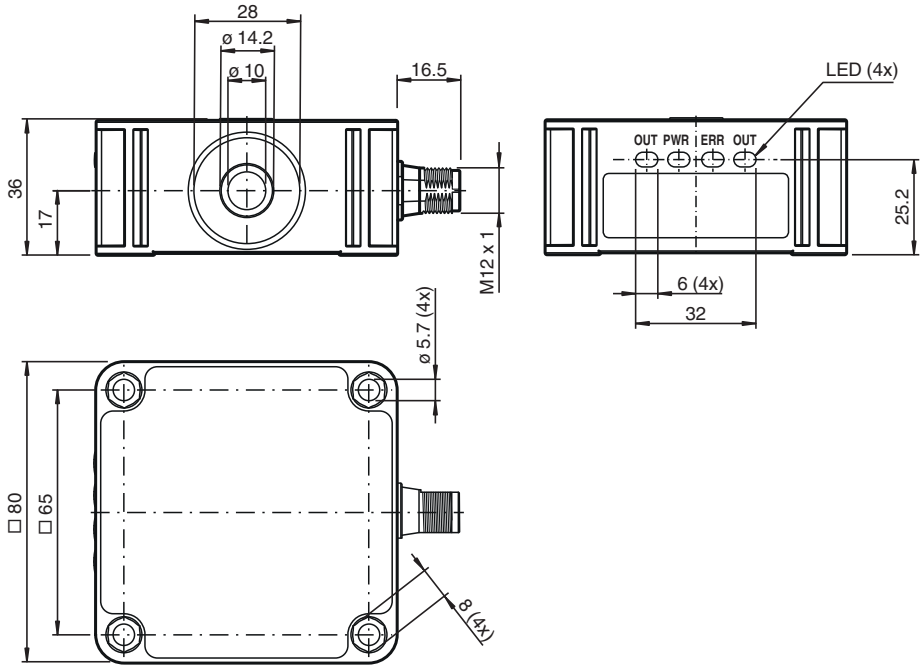


## Technical Data

| General specifications | |
|---|---|
| Sensing range | 30 ... 500 mm |
| Adjustment range | 50 ... 500 mm |
| Dead band | 0 ... 30 mm |
| Standard target plate | 100 mm x 100 mm |
| Transducer frequency | approx. 400 kHz |
| Response delay | 40 ms |

Release date: 2025-12-03 Date of issue: 2025-12-03 Filename: 70165295-100007_eng.pdf

## Technical Data

| | | |
|---|---|---|
| Sensor cycle time | | ≥ 10 ms |
| Temperature influence | | ≤ ± 0,75 % of the full-scale value 20 min after switching on |
| **Memory** | | |
| Non-volatile memory | | EEPROM |
| Write cycles | | 300000 |
| **Indicators/operating means** | | |
| LED green | | solid: power on<br>flashing: standby mode |
| LED yellow | | solid: object in evaluation range<br>flashing: programming of the limits |
| LED red | | solid: fault<br>flashing: programming of the limits, object not detected<br>fast flashes: short-circuit or overtemperature |
| **Electrical specifications** | | |
| Operating voltage | $U_B$ | 10 ... 30 V DC , ripple 10 $\%_{SS}$ |
| No-load supply current | $I_0$ | ≤ 85 mA |
| Power consumption | $P_0$ | ≤ 1200 mW |
| Time delay before availability | $t_v$ | ≤ 300 ms |
| **Input/Output** | | |
| Input/output type | | 1 synchronization connection, bidirectional |
| 0 Level | | 0 ... 1 V |
| 1 Level | | 2.5 V ... $U_B$ |
| Input impedance | | > 22 kΩ |
| Output current | | current source < 2.5 mA |
| Pulse length | | ≥ 1 ms with external control, low active |
| Synchronization frequency | | |
| Common mode operation | | ≤ 100 Hz |
| Multiplex operation | | ≤ 100 Hz / n , n = number of sensors , n ≤ 10 |
| **Input** | | |
| Input type | | 1 program input |
| Level (evaluation limit 1) | | 0 ... 0.6 V |
| Level (evaluation limit 2) | | 3.7 V ... $U_B$ |
| Input impedance | | > 4.7 kΩ |
| Pulse length | | ≥ 1 s |
| **Analog output** | | |
| Output type | | 1 analog output 0 ... 10 V |
| Resolution | | evaluation range [mm]/4000, but ≥ 0.35 mm |
| Deviation of the characteristic curve | | ≤ ± 0.2 % of full-scale value |
| Repeat accuracy | | ≤ ± 0.1 % of full-scale value |
| Load resistor | | ≥ 1000 Ω |
| **Compliance with standards and directives** | | |
| Standard conformity | | |
| Standards | | EN 60947-5-2<br>EN 60947-5-7 |
| **Approvals and certificates** | | |
| UL approval | | cULus Listed, Class 2 Power Source |
| CCC approval | | CCC approval / marking not required for products rated ≤36 V |
| **Ambient conditions** | | |
| Ambient temperature | | -25 ... 70 °C (-13 ... 158 °F) |
| Storage temperature | | -40 ... 85 °C (-40 ... 185 °F) |
| **Mechanical specifications** | | |
| Connection type | | Connector plug |
| Degree of protection | | IP67 |
| Material | | |

Release date: 2025-12-03 Date of issue: 2025-12-03 Filename: 70165295-100007_eng.pdf

## Technical Data

| | |
|---|---|
| Housing | PC-GF10 |
| Transducer | epoxy resin/hollow glass sphere mixture; polyurethane foam |
| Connector | |
| Threading | M12 x 1 |
| Number of pins | 5 |
| Material | Diecast zinc |
| Mass | 130 g |
| Tightening torque, fastening screws | max. 3 Nm |
| Dimensions | |
| Height | 36 mm |
| Width | 80 mm |
| Length | 80 mm |
| **Factory settings** | |
| Output | evaluation limit A1: 50 mm<br>evaluation limit A2: 500 mm<br>output function: rising ramp |
| Beam width | wide |

## Connection Assignment

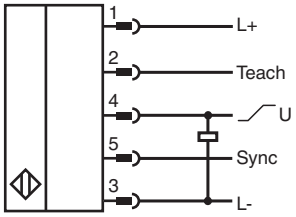


## Connection Assignment

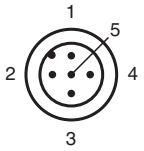


Wire colors in accordance with EN 60947-5-2

| | | |
|---|---|---|
| 1 | BN | (brown) |
| 2 | WH | (white) |
| 3 | BU | (blue) |
| 4 | BK | (black) |
| 5 | GY | (gray) |

Release date: 2025-12-03 Date of issue: 2025-12-03 Filename: 70165295-100007_eng.pdf

## Characteristic Curve

### Characteristic response curve

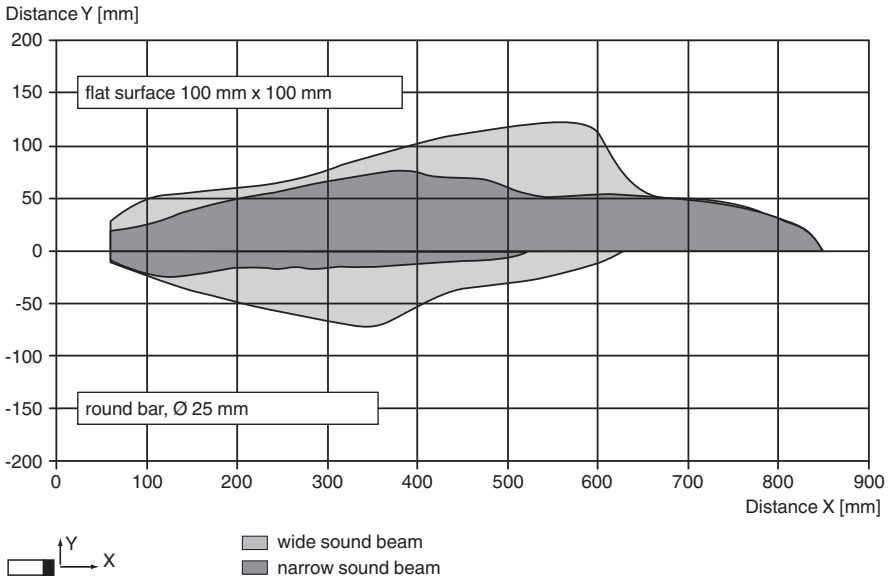


### Analog output modes

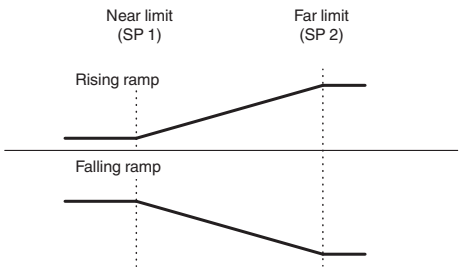


## Operation

The sensor features a synchronization input (Sync) for suppressing ultrasonic mutual interference („crosstalk“).
The following synchronization modes are available:
1. Automatic multiplex mode
2. Automatic common mode
3. Externally controlled synchronization

## Documentation

For information on programming and synchronisation you may refer to the commissioning instruction.

## Teach-In

The sensor is equipped with 1 analog output with 2 programmable limits. The programming of the limits, the output modes and the sound beam width can be done by using the sensor´s teach input.

Release date: 2025-12-03 Date of issue: 2025-12-03 Filename: 70165295-100007_eng.pdf