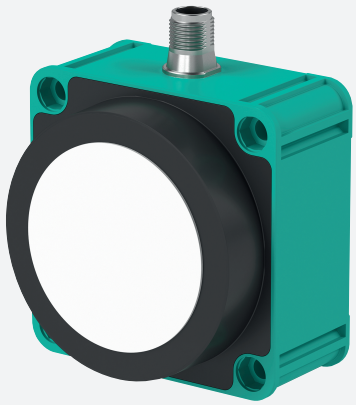

Ultrasonic sensor

UB6000-F42-I-V15

- Analog output 4 mA ... 20 mA
- Selectable sound lobe width
- TEACH-IN
- Synchronization options
- Degree of protection IP67

Ultrasonic sensor with 1 analog output in cubic design

Function

The ultrasonic sensor combines versatility with a wide range of functions and a universal measuring principle.
Thanks to the simple sensor synchronization when using several sensors at the same time, interference-free operation of your system is possible.
The adjustable sound beam width enables optimal adaptation to your application without loss of range.

Dimensions

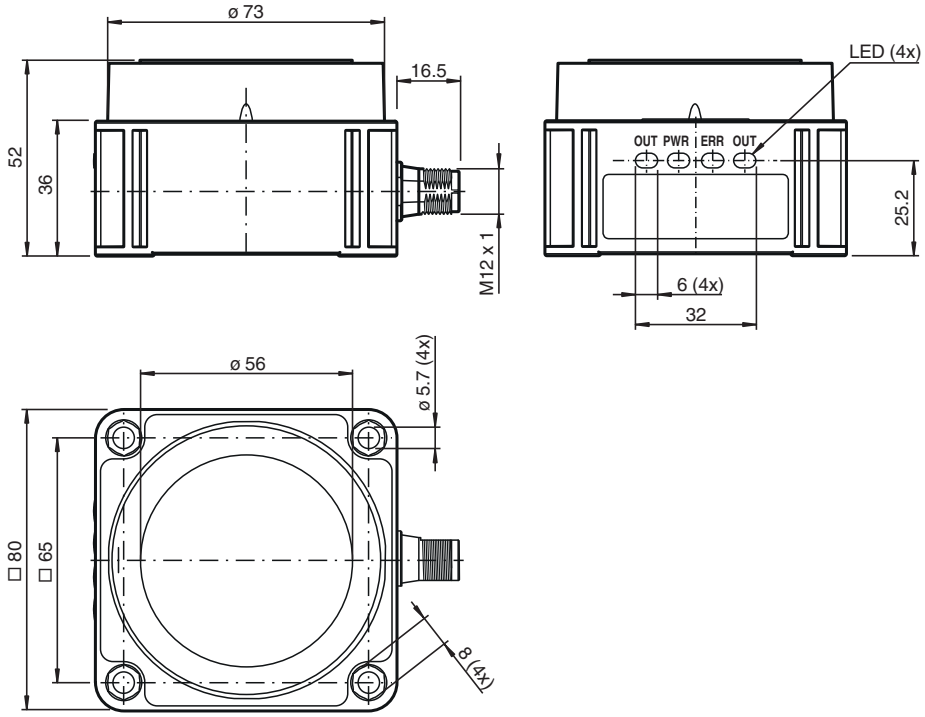

Technical Data

General specifications	
Sensing range	350 ... 6000 mm
Adjustment range	400 ... 6000 mm
Dead band	0 ... 350 mm
Standard target plate	100 mm x 100 mm
Transducer frequency	approx. 65 kHz

Release date: 2025-12-03 Date of issue: 2025-12-03 Filename: 70165295-100022_eng.pdf

Technical Data

Response delay		312 ms
Sensor cycle time		≥ 78 ms
Temperature influence		≤ ± 0,75 % of the full-scale value 20 min after switching on
Memory		
Non-volatile memory		EEPROM
Write cycles		300000
Indicators/operating means		
LED green		solid: power on flashing: standby mode
LED yellow		solid: object in evaluation range flashing: programming of the limits
LED red		solid: fault flashing: programming of the limits, object not detected
Electrical specifications		
Operating voltage	U_B	10 ... 30 V DC , ripple 10 $\%_{SS}$
No-load supply current	I_0	≤ 85 mA
Power consumption	P_0	≤ 1200 mW
Time delay before availability	t_v	≤ 300 ms
Input/Output		
Input/output type		1 synchronization connection, bidirectional
0 Level		0 ... 1 V
1 Level		2.5 V ... U_B
Input impedance		> 22 kΩ
Output current		current source < 2.5 mA
Pulse length		≥ 1 ms with external control, low active
Synchronization frequency		
Common mode operation		≤ 12 Hz
Multiplex operation		≤ 12 Hz / n , n = number of sensors , n ≤ 10
Input		
Input type		1 program input
Level (evaluation limit 1)		0 ... 0.6 V
Level (evaluation limit 2)		3.7 V ... U_B
Input impedance		> 4.7 kΩ
Pulse length		≥ 1 s
Analog output		
Output type		1 analog output 4 ... 20 mA
Resolution		Evaluation range [mm]/3200, however ≥ 0.35 mm
Deviation of the characteristic curve		≤ ± 0.2 % of full-scale value
Repeat accuracy		≤ ± 0.1 % of full-scale value
Load resistor		≤ 500 Ω
Compliance with standards and directives		
Standard conformity		
Standards		EN 60947-5-2 EN 60947-5-7
Approvals and certificates		
UL approval		cULus Listed, Class 2 Power Source
CCC approval		CCC approval / marking not required for products rated ≤36 V
Ambient conditions		
Ambient temperature		-25 ... 70 °C (-13 ... 158 °F)
Storage temperature		-40 ... 85 °C (-40 ... 185 °F)
Mechanical specifications		
Connection type		Connector plug
Degree of protection		IP67

Release date: 2025-12-03 Date of issue: 2025-12-03 Filename: 70165295-100022_eng.pdf

Technical Data

Material	
Housing	PC-GF10
Transducer	epoxy resin/hollow glass sphere mixture; polyurethane foam
Connector	
Threading	M12 x 1
Number of pins	5
Material	Diecast zinc
Mass	200 g
Tightening torque, fastening screws	max. 3 Nm
Dimensions	
Height	52 mm
Width	80 mm
Length	80 mm
Factory settings	
Output	evaluation limit A1: 400 mm evaluation limit A2: 6000 mm output function: rising ramp
Beam width	wide

Connection Assignment

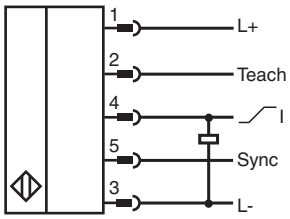

Connection Assignment

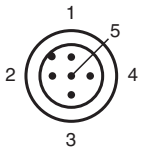

Wire colors in accordance with EN 60947-5-2

1	BN	(brown)
2	WH	(white)
3	BU	(blue)
4	BK	(black)
5	GY	(gray)

Release date: 2025-12-03 Date of issue: 2025-12-03 Filename: 70165295-100022_eng.pdf

Characteristic Curve

Characteristic response curve

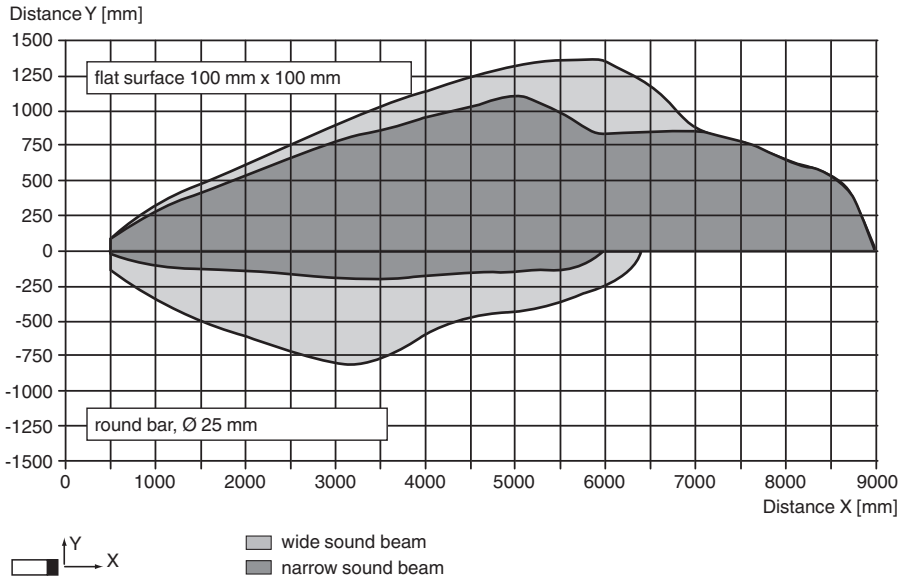

Analog output modes

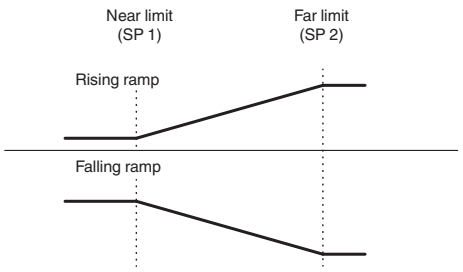

Operation

The sensor features a synchronization input (Sync) for suppressing ultrasonic mutual interference („crosstalk“).
The following synchronization modes are available:
1. Automatic multiplex mode
2. Automatic common mode
3. Externally controlled synchronization

Documentation

For information on programming and synchronisation you may refer to the commissioning instruction.

Teach-In

The sensor is equipped with 1 analog output with 2 programmable limits. The programming of the limits, the output modes and the sound beam width can be done by using the sensor´s teach input.

Release date: 2025-12-03 Date of issue: 2025-12-03 Filename: 70165295-100022_eng.pdf