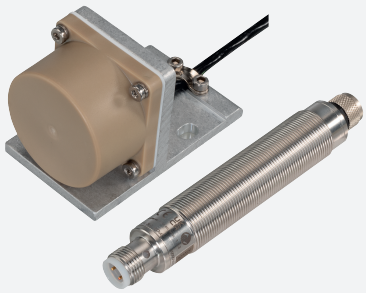

# Inductive Sensor Kit

## NBN25-F135-M18-1M-SET

- The technical data only apply when an inductive sensor head is connected
- Extremely wide temperature range of the inductive sensor head 0 ... 250 °C (0 ... 482 °F)
- IO-Link Interface for process data, parameterization and diagnosis
- Replacement of the sensor heads
- Identical amplifier for different cable lengths
- Direct baying of the sensor heads through synchronization

Modular inductive sensor for high-temperature applications with rated operating distance 25 mm, with IO-Link interface, consisting of separable inductive sensor head with 1 m cable and amplifier

## Function

The inductive sensor kit for high temperature applications is a modular inductive sensor consisting of an inductive sensor head for the high temperature range and a separate amplifier, which is mounted remotely in the normal temperature range. The amplifier can be separated from the sensor head via a plug connection. This gives you the flexibility to mount and replace the components easily and independently of each other. The sensor head has a fixed cable with plug, which can have a cable length of up to 30 m depending on the sensor head version.
For flexible use in confined spaces, several sensor heads can be mounted directly next to each other or opposite each other. Mutual interference is reliably avoided both in IO-Link mode and in SIO mode thanks to automatic synchronization. This takes place within defined distance ranges either directly via inductive neighbor detection for 2 sensor heads or via a cable using the sync connection for up to 4 sensor heads.
The integrated IO-Link interface enables optimum adaptation to different applications through parameterization and process data transfer. Additional internal function data and quality measurement data on the status of the sensor head enables condition monitoring and predictive maintenance. The determined signal strength can, for example, provide conclusions about changing object statuses if required. Replacement cycles can be defined individually instead of across the board by evaluating the quality measurement data. Please contact your Peppel+Fuchs technical contact for further information.

## Dimensions

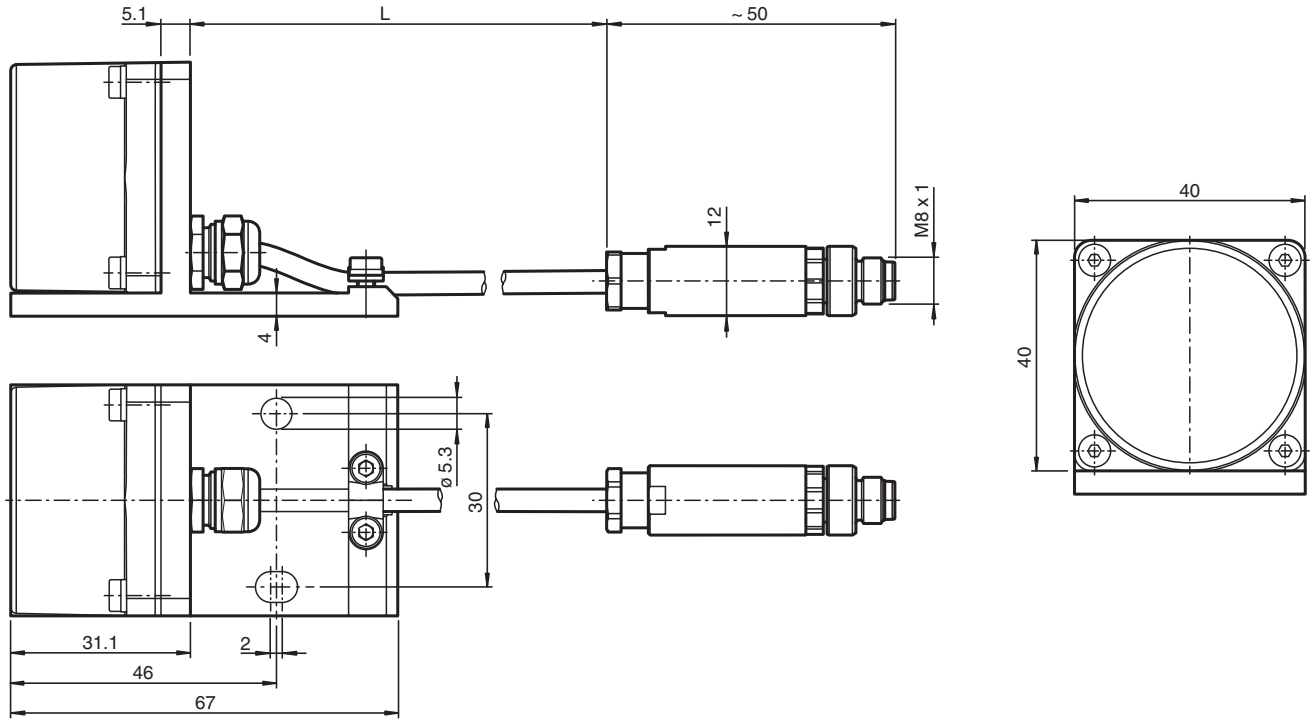


Release date: 2026-06-03 Date of issue: 2026-06-03 Filename: 70166663-100000_eng.pdf

## Dimensions

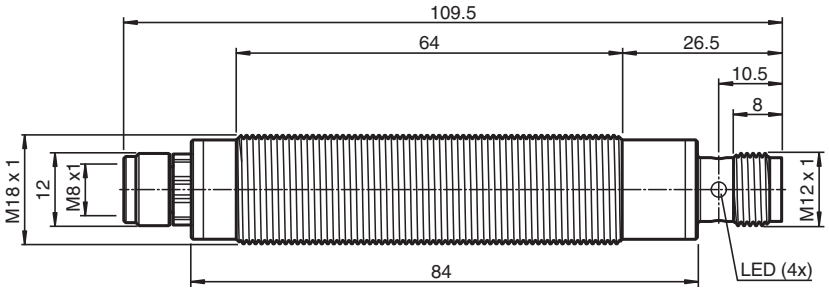


## Technical Data

| | | |
|---|---|---|
| **General specifications** | | |
| Switching function | | Normally open/closed (NO/NC) programmable |
| Output type | | PNP |
| Rated operating distance | $s_n$ | 25 mm |
| Installation | | flush mountable |
| Output polarity | | DC |
| Assured operating distance | $s_a$ | 0 ... 20 mm |
| Actuating element | | Steel Fe360 , 75 mm x 75 mm x 1 mm |
| Reduction factor $r_{Al}$ | | 0.7 |
| Reduction factor $r_{Cu}$ | | 0.7 |
| Reduction factor $r_{304}$ | | 0.6 |
| Reduction factor $r_{Brass}$ | | 1.1 |
| Output type | | 4-wire |
| **Nominal ratings** | | |
| Operating voltage | $U_B$ | 10 ... 30 V |
| Switching frequency | f | 0 ... 30 Hz |
| Hysteresis | H | typ. 5 % |
| Reverse polarity protection | | reverse polarity protected |
| Short-circuit protection | | pulsing |
| Voltage drop | $U_d$ | ≤ 3 V |
| Operating current | $I_L$ | 0 ... 200 mA |
| Off-state current | $I_r$ | 0 ... 0.5 mA typ. 0.1 µA |
| No-load supply current | $I_0$ | ≤ 40 mA |
| Power consumption | P | ≤ 420 mW |
| Time delay before availability | $t_v$ | ≤ 300 ms |
| Status indicator | | Dual color-LED, yellow/green<br>SIO mode:<br>yellow = switching state<br>green = power supply on<br>IO-Link mode:<br>see manual |
| **Interface** | | |
| Interface type | | IO-Link ( via C/Q = pin 4 ) |
| IO-Link revision | | 1.1 |
| Device profile | | Identification and Diagnosis - I&D<br>Smart Sensor - SSP 1.1 |

Release date: 2026-06-03 Date of issue: 2026-06-03 Filename: 70166663-100000_eng.pdf

## Technical Data

| | | |
|---|---|---|
| Process data | | Input 5 Bit<br>- switching signal 1 Bit<br>- uncertainty indication 1 Bit<br>- status signal 1 Bit<br>- maintenance warning 1 Bit |
| Vendor ID | | 1 (0x0001) |
| Device ID | | 2098689 (0x200601) |
| Transfer rate | | COM2 (38.4 kBit/s) |
| Min. cycle time | | 2.3 ms |
| SIO mode support | | yes |
| Compatible master port type | | Class A<br>Class B (use 3-pole adapter or 3-wire cable) |
| **Input/Output** | | |
| Designation | | Sync |
| Input/output type | | 1 synchronization connection, bidirectional |
| **Conformity** | | |
| PWIS conformity | | VDMA24364-B1/B2/C1/T220°C-W |
| **Compliance with standards and directives** | | |
| Standard conformity | | |
| Standards | | EN IEC 60947-5-2:2020<br>EN IEC 60947-5-2:2020-03 /RoHs-II |
| Communication interface | | IEC 61131-9 / IO-Link V1.1.3 |
| **Approvals and certificates** | | |
| Protection class | | III |
| Rated insulation voltage | $U_i$ | 36 V |
| Rated impulse withstand voltage | $U_{imp}$ | 500 V |
| UL approval | | cULus Listed, General Purpose, Class 2 Power Source |
| CCC approval | | CCC approval / marking not required for products rated ≤36 V |
| **Ambient conditions** | | |
| Ambient temperature | | 0 ... 250 °C (32 ... 482 °F)<br>Note: M8 connector, 4-pin 0 ... 70 °C (32 ... 158 °F) |
| Storage temperature | | 0 ... 70 °C (32 ... 158 °F) |
| Vibration resistance | | 30 g |
| **Mechanical specifications** | | |
| Connection type | | Connector plug |
| Degree of protection | | Sensor head: IP65<br>amplifier: IP67 |
| Material | | |
| Housing | | Sensor head: PEEK 450, 30% fibre glass<br>amplifier: Stainless steel 1.4305 / AISI 303 |
| Mounting materials | | Mounting bracket made of aluminum 3.3206 |
| Connector | | |
| Threading | | M12 x 1 |
| Number of pins | | 4 |
| Connection assembly | | additional M8 plug connector on the sensor head side |
| Cable | | |
| Cable diameter | | 3.9 mm |
| Bending radius | | fixed installation 7.5 x cable diameter<br>movable installation 15 x cable diameter |
| Material | | PFA |
| Color | | black |
| Number of cores | | 3 |
| Core cross section | | 0.34 $mm^2$ |
| Shield | | grid |
| Length | L | 1 m |
| Mass | | 251 g |
| Dimensions | | |

Release date: 2026-06-03 Date of issue: 2026-06-03 Filename: 70166663-100000_eng.pdf

## Technical Data

| | |
|---|---|
| Height | 44 mm Sensor head |
| Width | 40 mm Sensor head |
| Length | 67 mm Sensor head |
| Mounting | amplifier: nuts, M18 |
| Tightening torque | ≤ 30 Nm |
| **Factory settings** | |
| Default setting | PNP, NO |
| **General information** | |
| Scope of delivery | 2 self locking nuts in scope of delivery |

## Connection Assignment

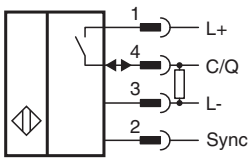


## Connection Assignment

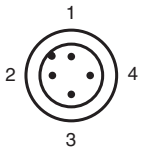


## Mounting

**Mounting Information**
The inductive sensor kit consists of a cylindrical amplifier and the inductive sensor head. Both main components can be disconnected from each other via a high-temperature cable. The amplifier or sensor head can be replaced independently of each other for servicing.
The following aspects must be observed during mounting:

- Mount the amplifier in the low-temperature area of the system. Only the sensor head may be exposed to high temperatures.
- Avoid kinking or crushing the high-temperature cable. Observe the permissible minimum bending radius.
- Avoid subjecting the sensor kit's cables to excessive tensile load.

**Caution!**
Malfunction due to mechanical impacts!
Avoid mechanical impacts to the sensor head. The ferrite core of the sensor coil is located directly under the housing cover. Impacts to the sensor head can cause the ferrite core to break, which can lead to sensor fault.
**Caution!**
Malfunction due to kinking/crushing stress on the high-temperature cable!
If the high-temperature cable is subjected to kinking or squeezing stress, the internal structure of the cable is immediately changed to such an extent that this can lead to the sensor losing its function.
**Caution!**
Failure may occur if the cables in the sensor kit are subjected to a tensile load > 60 N!
When the sensor kit is installed and operational, avoid subjecting the cables to a tensile load > 60 N at all times. Excessive tensile load can cause the sensor kit to malfunction.
**Note!**
The sensor head cannot be opened non-destructively.

**Installation Conditions**
Detailed information on relevant installation conditions, such as minimum distances to metallic surfaces or minimum distances when several sensor heads are mounted in a row, can be found in the manual. When using the synchronization options, also refer to the information in the manual. You can access this document via the product detail page at www.pepperl-fuchs.com.

**Protection of the Sensor Against Dripping Water**
With the SH-F35 accessory, Pepperl+Fuchs offers a protective cover for the sensor head of the F135 series. The protective cover is simply attached to the sensor head and offers limited protection against dripping water. The SH-F35 protective coveradditionally increases the protection of the sensor head against external mechanical influences.

Release date: 2026-06-03 Date of issue: 2026-06-03 Filename: 70166663-100000_eng.pdf

## Technical Features

**Useful Lifetime**
The useful lifetime of the sensor head of the inductive sensor kit is mainly determined by the functionality of the coils in the sensor head, whose coil are coated with a special high-temperature protective lacquer. The insulation effect of the protective lacquer changes over time, depending on the ambient temperature to which the sensor head is exposed.
The following table values serve as an orientation framework for the useful lifetime.

| Operating temperature T | Lifetime |
|---|---|
| 150 °C | 2200000 h |
| 180 °C | 340000h |
| 200 °C | 97000 h |
| 225 °C | 21000 h |
| 250 °C | 5000 h |

**Note**
You can specifically monitor the condition of the sensor head via IO-Link using the determined function and quality measurement data of the sensor head. By evaluating this data, you can individually assess the useful lifetime of the sensor head and, if necessary, significantly increase it compared to the table values.

## Additional Information

**Further Documentation**
Detailed information on commissioning, parameterization and use of the sensor kits can be found in the manual.
Furthermore you can find detailed information on relevant installation conditions, such as minimum distances to metallic surfaces or minimum distances when several sensor heads are arranged in a row.
A complete overview of all parameters and commands can be found in the IODD Parameter Datasheet.
You can download both from the product detail page at www.pepperl-fuchs.com.

## Accessories

Accessories for this product can be found on the internet at www.pepperl-fuchs.com.

## Kit component

| | | |
|---|---|---|
| | **F135-M18-E2-IO-V31-V1** | Amplifier for inductive sensor kit for connection to inductive sensor head NBN*-F135*-V31/NBN*-F135L*-V31 |
| | **NBN25-F135-250-1M-V31** | Inductive sensor head with rated operating distance 25 mm and 1 m cable, for connection to amplifier F135-M18-E2-IO-V31-V1 |

Release date: 2026-06-03 Date of issue: 2026-06-03 Filename: 70166663-100000_eng.pdf