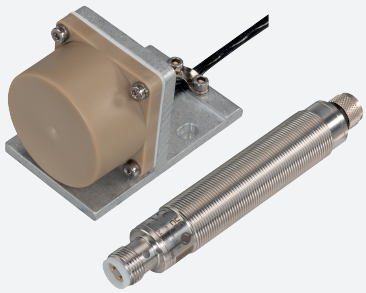

Inductive Sensor Kit

NBN25-F135-M18-20M-SET

- The technical data only apply when an inductive sensor head is connected
- Extremely wide temperature range of the inductive sensor head 0 ... 250 °C (0 ... 482 °F)
- IO-Link Interface for process data, parameterization and diagnosis
- Replacement of the sensor heads
- Identical amplifier for different cable lengths
- Direct baying of the sensor heads through synchronization

Modular inductive sensor for high-temperature applications with rated operating distance 25 mm, with IO-Link interface, consisting of separable inductive sensor head with 20 m cable and amplifier

Function

The inductive sensor kit for high temperature applications is a modular inductive sensor consisting of an inductive sensor head for the high temperature range and a separate amplifier, which is mounted remotely in the normal temperature range. The amplifier can be separated from the sensor head via a plug connection. This gives you the flexibility to mount and replace the components easily and independently of each other. The sensor head has a fixed cable with plug, which can have a cable length of up to 30 m depending on the sensor head version.
For flexible use in confined spaces, several sensor heads can be mounted directly next to each other or opposite each other. Mutual interference is reliably avoided both in IO-Link mode and in SIO mode thanks to automatic synchronization. This takes place within defined distance ranges either directly via inductive neighbor detection for 2 sensor heads or via a cable using the sync connection for up to 4 sensor heads.
The integrated IO-Link interface enables optimum adaptation to different applications through parameterization and process data transfer. Additional internal function data and quality measurement data on the status of the sensor head enables condition monitoring and predictive maintenance. The determined signal strength can, for example, provide conclusions about changing object statuses if required. Replacement cycles can be defined individually instead of across the board by evaluating the quality measurement data. Please contact your Peppel+Fuchs technical contact for further information.

Dimensions

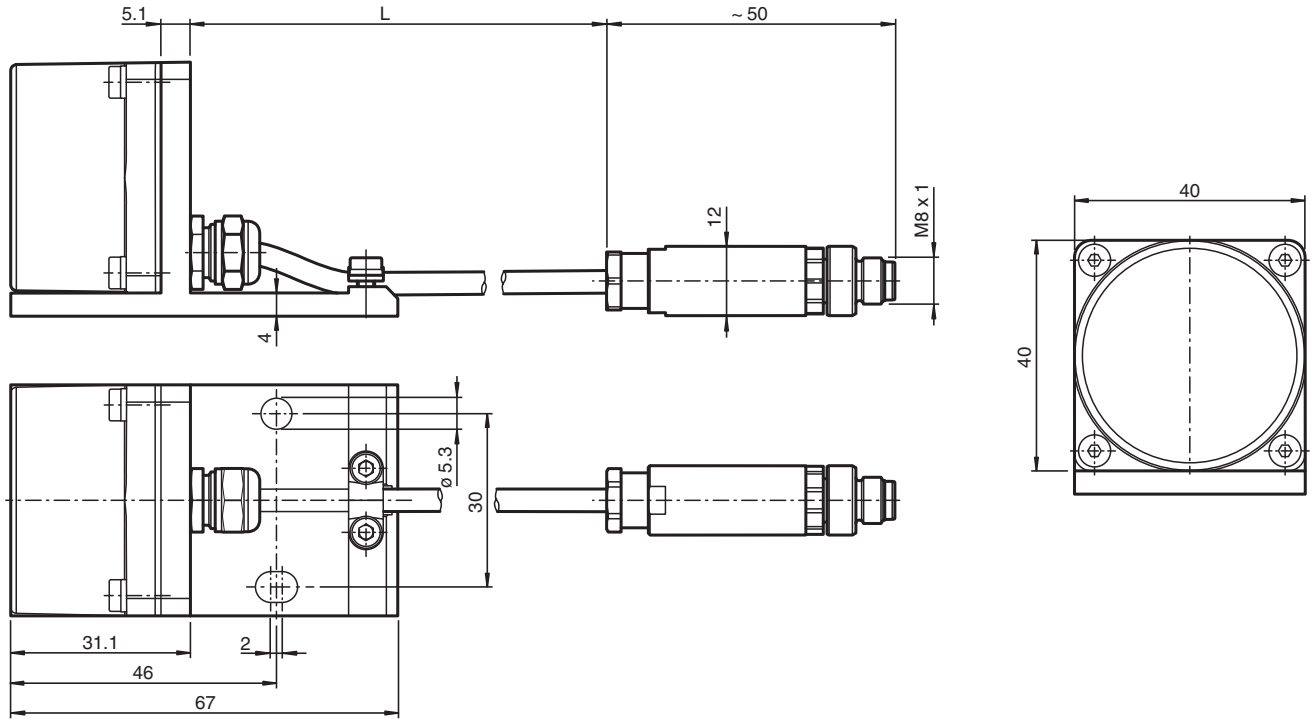

Release date: 2026-06-03 Date of issue: 2026-06-03 Filename: 70166663-100004_eng.pdf

Dimensions

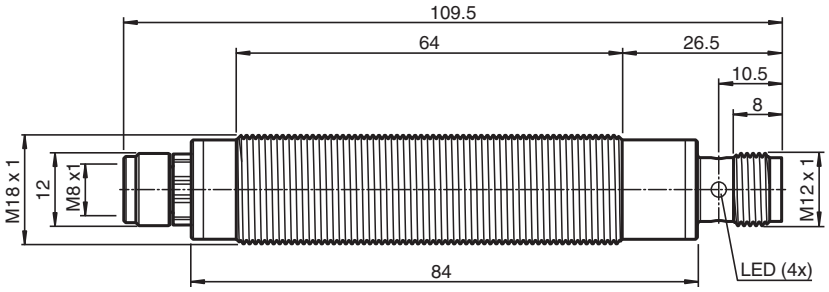

Technical Data

General specifications		
Switching function		Normally open/closed (NO/NC) programmable
Output type		PNP
Rated operating distance	s_n	25 mm
Installation		flush mountable
Output polarity		DC
Assured operating distance	s_a	0 ... 20 mm
Actuating element		Steel Fe360 , 75 mm x 75 mm x 1 mm
Reduction factor r_{Al}		0.7
Reduction factor r_{Cu}		0.7
Reduction factor r_{304}		0.6
Reduction factor r_{Brass}		1.1
Output type		4-wire
Nominal ratings		
Operating voltage	U_B	10 ... 30 V
Switching frequency	f	0 ... 30 Hz
Hysteresis	H	typ. 5 %
Reverse polarity protection		reverse polarity protected
Short-circuit protection		pulsing
Voltage drop	U_d	≤ 3 V
Operating current	I_L	0 ... 200 mA
Off-state current	I_r	0 ... 0.5 mA typ. 0.1 µA
No-load supply current	I_0	≤ 40 mA
Power consumption	P	≤ 420 mW
Time delay before availability	t_v	≤ 300 ms
Status indicator		Dual color-LED, yellow/green SIO mode: yellow = switching state green = power supply on IO-Link mode: see manual
Interface		
Interface type		IO-Link (via C/Q = pin 4)
IO-Link revision		1.1
Device profile		Identification and Diagnosis - I&D Smart Sensor - SSP 1.1

Release date: 2026-06-03 Date of issue: 2026-06-03 Filename: 70166663-100004_eng.pdf

Technical Data

Process data		Input 5 Bit - switching signal 1 Bit - uncertainty indication 1 Bit - status signal 1 Bit - maintenance warning 1 Bit
Vendor ID		1 (0x0001)
Device ID		2098689 (0x200601)
Transfer rate		COM2 (38.4 kBit/s)
Min. cycle time		2.3 ms
SIO mode support		yes
Compatible master port type		Class A Class B (use 3-pole adapter or 3-wire cable)
Input/Output		
Designation		Sync
Input/output type		1 synchronization connection, bidirectional
Conformity		
PWIS conformity		VDMA24364-B1/B2/C1/T220°C-W
Compliance with standards and directives		
Standard conformity		
Standards		EN IEC 60947-5-2:2020 EN IEC 60947-5-2:2020-03 /RoHs-II
Communication interface		IEC 61131-9 / IO-Link V1.1.3
Approvals and certificates		
Protection class		III
Rated insulation voltage	U_i	36 V
Rated impulse withstand voltage	U_{imp}	500 V
UL approval		cULus Listed, General Purpose, Class 2 Power Source
CCC approval		CCC approval / marking not required for products rated ≤36 V
Ambient conditions		
Ambient temperature		0 ... 250 °C (32 ... 482 °F) Note: M8 connector, 4-pin 0 ... 70 °C (32 ... 158 °F)
Storage temperature		0 ... 70 °C (32 ... 158 °F)
Vibration resistance		30 g
Mechanical specifications		
Connection type		Connector plug
Degree of protection		Sensor head: IP65 amplifier: IP67
Material		
Housing		Sensor head: PEEK 450, 30% fibre glass amplifier: Stainless steel 1.4305 / AISI 303
Mounting materials		Mounting bracket made of aluminum 3.3206
Connector		
Threading		M12 x 1
Number of pins		4
Connection assembly		additional M8 plug connector on the sensor head side
Cable		
Cable diameter		3.9 mm
Bending radius		fixed installation 7.5 x cable diameter movable installation 15 x cable diameter
Material		PFA
Color		black
Number of cores		3
Core cross section		0.34 mm^2
Shield		grid
Length	L	20 m
Mass		1026 g
Dimensions		

Release date: 2026-06-03 Date of issue: 2026-06-03 Filename: 70166663-100004_eng.pdf

Technical Data

Height	44 mm Sensor head
Width	40 mm Sensor head
Length	67 mm Sensor head
Mounting	amplifier: nuts, M18
Tightening torque	≤ 30 Nm
Factory settings	
Default setting	PNP, NO
General information	
Scope of delivery	2 self locking nuts in scope of delivery

Connection Assignment

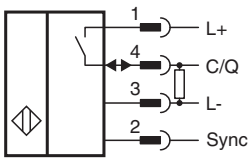

Connection Assignment

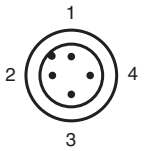

Mounting

Mounting Information
The inductive sensor kit consists of a cylindrical amplifier and the inductive sensor head. Both main components can be disconnected from each other via a high-temperature cable. The amplifier or sensor head can be replaced independently of each other for servicing.
The following aspects must be observed during mounting:

- Mount the amplifier in the low-temperature area of the system. Only the sensor head may be exposed to high temperatures.
- Avoid kinking or crushing the high-temperature cable. Observe the permissible minimum bending radius.
- Avoid subjecting the sensor kit's cables to excessive tensile load.

Caution!
Malfunction due to mechanical impacts!
Avoid mechanical impacts to the sensor head. The ferrite core of the sensor coil is located directly under the housing cover. Impacts to the sensor head can cause the ferrite core to break, which can lead to sensor fault.
Caution!
Malfunction due to kinking/crushing stress on the high-temperature cable!
If the high-temperature cable is subjected to kinking or squeezing stress, the internal structure of the cable is immediately changed to such an extent that this can lead to the sensor losing its function.
Caution!
Failure may occur if the cables in the sensor kit are subjected to a tensile load > 60 N!
When the sensor kit is installed and operational, avoid subjecting the cables to a tensile load > 60 N at all times. Excessive tensile load can cause the sensor kit to malfunction.
Note!
The sensor head cannot be opened non-destructively.

Installation Conditions
Detailed information on relevant installation conditions, such as minimum distances to metallic surfaces or minimum distances when several sensor heads are mounted in a row, can be found in the manual. When using the synchronization options, also refer to the information in the manual. You can access this document via the product detail page at www.pepperl-fuchs.com.

Protection of the Sensor Against Dripping Water
With the SH-F35 accessory, Pepperl+Fuchs offers a protective cover for the sensor head of the F135 series. The protective cover is simply attached to the sensor head and offers limited protection against dripping water. The SH-F35 protective coveradditionally increases the protection of the sensor head against external mechanical influences.

Release date: 2026-06-03 Date of issue: 2026-06-03 Filename: 70166663-100004_eng.pdf

Technical Features

Useful Lifetime
The useful lifetime of the sensor head of the inductive sensor kit is mainly determined by the functionality of the coils in the sensor head, whose coil are coated with a special high-temperature protective lacquer. The insulation effect of the protective lacquer changes over time, depending on the ambient temperature to which the sensor head is exposed.
The following table values serve as an orientation framework for the useful lifetime.

Operating temperature T	Lifetime
150 °C	2200000 h
180 °C	340000h
200 °C	97000 h
225 °C	21000 h
250 °C	5000 h

Note
You can specifically monitor the condition of the sensor head via IO-Link using the determined function and quality measurement data of the sensor head. By evaluating this data, you can individually assess the useful lifetime of the sensor head and, if necessary, significantly increase it compared to the table values.

Additional Information

Further Documentation
Detailed information on commissioning, parameterization and use of the sensor kits can be found in the manual.
Furthermore you can find detailed information on relevant installation conditions, such as minimum distances to metallic surfaces or minimum distances when several sensor heads are arranged in a row.
A complete overview of all parameters and commands can be found in the IODD Parameter Datasheet.
You can download both from the product detail page at www.pepperl-fuchs.com.

Accessories

Accessories for this product can be found on the internet at www.pepperl-fuchs.com.

Kit component

	F135-M18-E2-IO-V31-V1	Amplifier for inductive sensor kit for connection to inductive sensor head NBN*-F135*-V31/NBN*-F135L*-V31
	NBN25-F135-250-20M-V31	Inductive sensor head with rated operating distance 25 mm and 20 m cable, for connection to amplifier F135-M18-E2-IO-V31-V1

Release date: 2026-06-03 Date of issue: 2026-06-03 Filename: 70166663-100004_eng.pdf