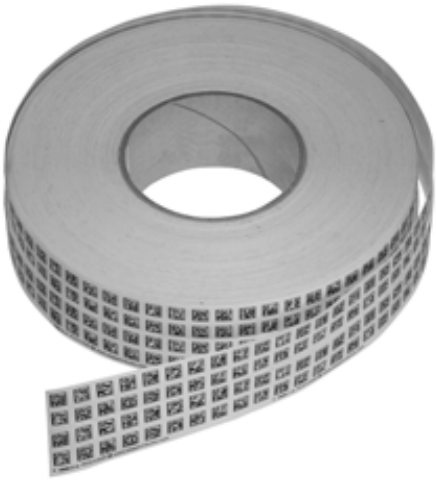

Dimensions

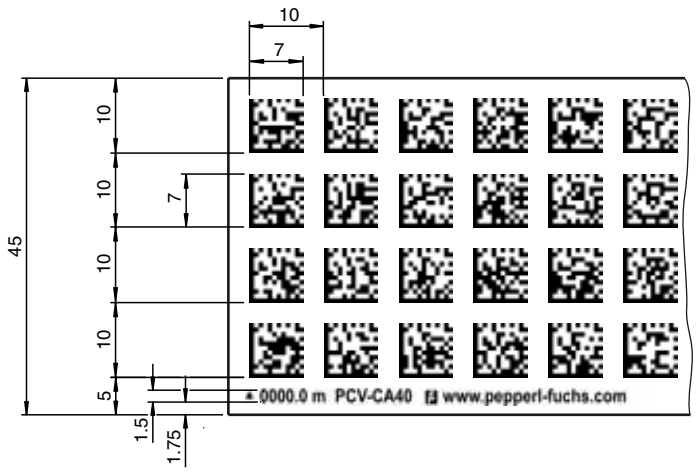

Model Number

PCV*-CA40-*

Data Matrix code tape

Features

- High chemical resistance
- Low weight
- Self-adhesive mounting
- High temperature resistance
- High mechanical stability

Technical data

General specifications	
Start position	0 … 9900 m (see Order Information)
Length	6 ... 100 m (see Order Information)
External diameter	max. 180 mm (with max. code tape length of 100 m)
Inside diameter	76 mm (role core)
Ambient conditions	
Operating temperature	-40 ... 100 °C (-40 ... 212 °F)
Installation temperature	10 ... 40 °C (50 ... 104 °F)
Environmental resistance	UV radiation Humidity Salt spray (150 h / 5%)
Chemical resistance	Oils Grease Fuels Aliphatic solvents Weak acids
Mechanical specifications	
Material thickness	150 µm
Material	polyester laminate
Surface	polyester , matte
Mass	6.3 g / m^2
Tensile strength	≥ 270 N
Adhesive	Acrylate-based adhesive ; curing 72 h
Adhesive strength	Average values (FTM2) Aluminum : 24 N / 25 mm High grade stainless steel : 25 N / 25 mm ABS : 22 N / 25 mm PP : 18 N / 25 mm HD-PE : 12 N / 25 mm LD-PE : 12 N / 25 mm
Note	Max. code tape length of 100 m per roll

Order Informationen

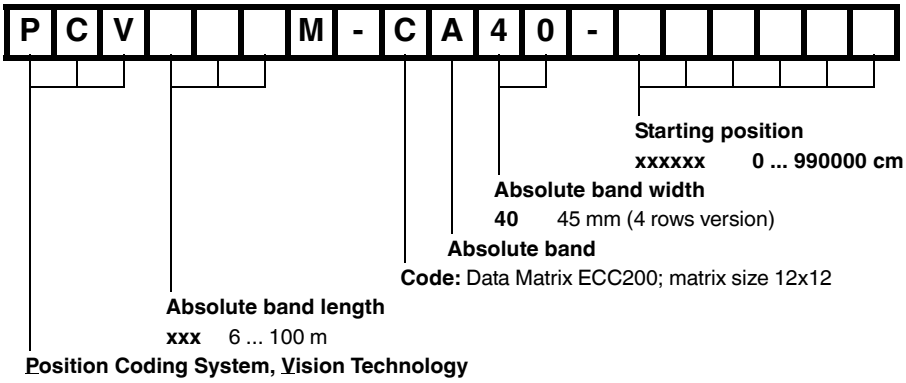

Release date: 2018-05-14 12:32 Date of issue: 2018-05-14 t158344_eng.xml