Absolute encoders

ENA42HD-S***-J1939

- Solid shaft
- Up to 31 bit overall resolution
- CAN bus with SAE J1939 protocol
- Free of wear magnetic sampling
- High resolution and accuracy
- Highly shock / vibration and soiling resistant
- Sturdy construction
- Increased shaft load capacity
- Stainless steel housing
- IP69K

Function

The ENA42HD series are high precision encoders with internal magnetic sampling.
This multiturn absolute encoder transmits a position value corresponding to the shaft setting via its interface.
The control module sends a start sequence to the absolute encoder to obtain the position data. The rotary encoder then sends the position data synchronous to the cycles of the control module. It is possible to select the counting direction with the function input.

Dimensions

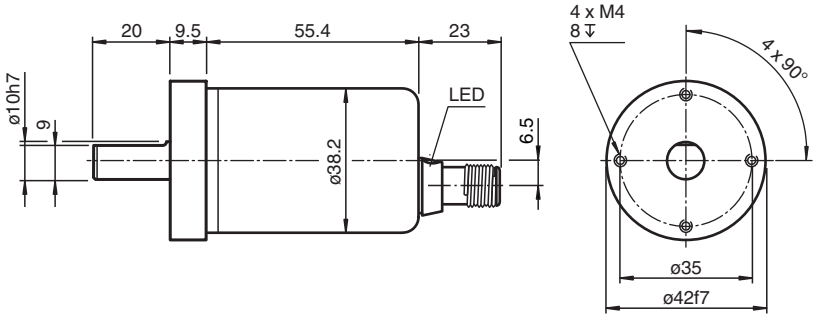

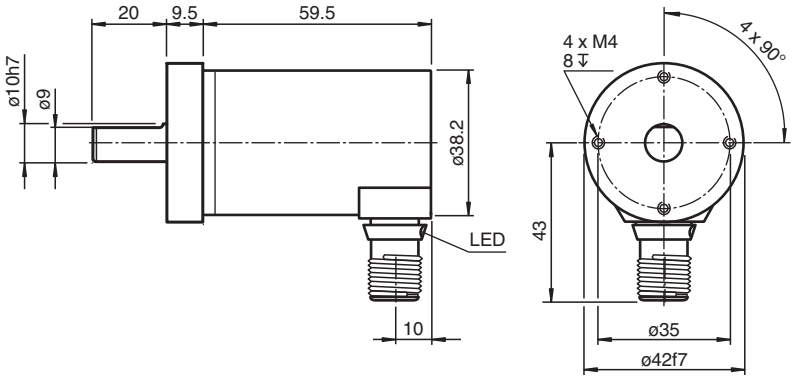

Dimensions

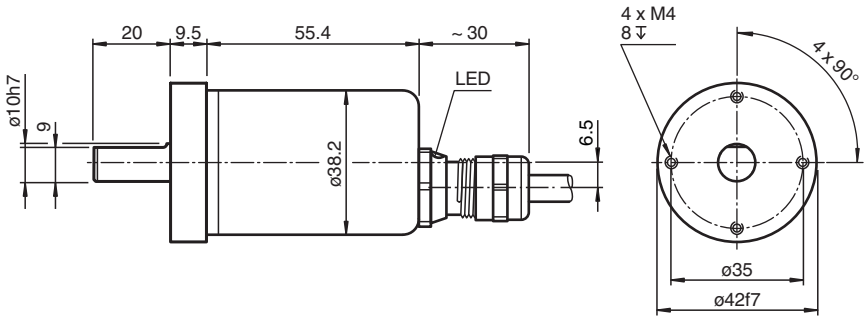

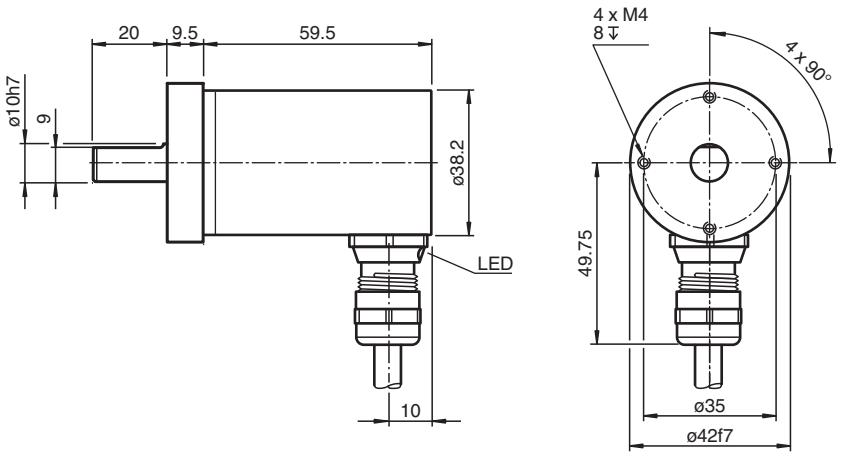

Technical Data

General specifications		
Detection type		magnetic sampling
Device type		Absolute encoders
Linearity error		≤ ± 0.1 °
UL File Number		E223176 "For use in NFPA 79 Applications only" , if UL marking is marked on the product.
Functional safety related parameters		
$MTTF_d$		480 a at 40 °C
Mission Time (T_M)		20 a
L_{10}		10 E+8 revolutions
Diagnostic Coverage (DC)		0 %
Indicators/operating means		
LED green		Operating mode
LED red		wrong baud rate
Electrical specifications		
Operating voltage	U_B	9 ... 30 V DC (with galvanic isolation)
Power consumption	P_0	≤ 1 W
Time delay before availability	t_v	< 250 ms
Output code		binary code
Code course (counting direction)		adjustable
Interface		
Interface type		J1939

Release date: 2022-12-12 Date of issue: 2022-12-12 Filename: t185533_eng.pdf

Technical Data

Resolution	
Single turn	up to 16 Bit
Multiturn	up to 15 Bit
Overall resolution	up to 31 Bit
Transfer rate	min. 20 kBit/s , max. 1 MBit/s
Cycle time	≥ 1 ms
Standard conformity	ISO 11898
Connection	
Connector	M12 connector, 5 pin
Cable	Ø6 mm, 4 x 2 x 0.14 mm²
Standard conformity	
Degree of protection	DIN EN 60529 , IP66 / IP68 / IP69K
Climatic testing	DIN EN 60068-2-3, no moisture condensation
Emitted interference	EN 61000-6-4:2007
Noise immunity	EN 61000-6-2:2005
Shock resistance	DIN EN 60068-2-27, 300 *g*, 6 ms
Vibration resistance	DIN EN 60068-2-6, 30 g, 10 ... 1000 Hz
Approvals and certificates	
UL approval	cULus Listed, General Purpose, Class 2 Power Source , if UL marking is marked on the product.
Ambient conditions	
Operating temperature	-40 ... 85 °C (-40 ... 185 °F)
Storage temperature	-40 ... 85 °C (-40 ... 185 °F)
Relative humidity	98 % , no moisture condensation
Mechanical specifications	
Material	
Housing	stainless steel 1.4404 / AISI 316L
Flange	stainless steel 1.4404 / AISI 316L
Shaft	Stainless steel 1.4412 / AISI 440B
Mass	approx. 350 g
Rotational speed	max. 6000 min $^{-1}$
Moment of inertia	30 gcm²
Starting torque	< 5 Ncm
Shaft load	
Axial	270 N
Radial	270 N

Accessories

	**V15B-G-2M-PUR-ABG-V15B-G**	PROFIBUS bus cable M12 socket straight to M12 plug straight B-coded, 5-pin, PUR cable 2-core violet, shielded
	**V15B-G-5M-PUR-ABG-V15B-G**	PROFIBUS bus cable M12 socket straight to M12 plug straight B-coded, 5-pin, PUR cable 2-core violet, shielded
	**V15B-G-10M-PUR-ABG-V15B-G**	PROFIBUS bus cable M12 socket straight to M12 plug straight B-coded, 5-pin, PUR cable 2-core violet, shielded
	**V15B-G-2M-PUR-ABG**	PROFIBUS bus cable female cordset single-ended M12 straight B-coded, 5-pin, PUR cable 2-core violet, shielded
	**V15B-G-5M-PUR-ABG**	PROFIBUS bus cable female cordset single-ended M12 straight B-coded, 5-pin, PUR cable 2-core violet, shielded

Release date: 2022-12-12 Date of issue: 2022-12-12 Filename: t185533_eng.pdf

Accessories

	**V15B-G-10M-PUR-ABG**	PROFIBUS bus cable female cordset single-ended M12 straight B-coded, 5-pin, PUR cable 2-core violet, shielded
	**V15B-W-ABG-PG9**	Female connector M12 angled B-coded 5-pin, for cable diameter 6 - 8 mm, shielded, field-attachable
	**V15B-G-ABG-PG9**	Female connector M12 straight B-coded 5-pin, for cable diameter 5 - 8 mm, shielded, field-attachable
	**9108, 6**	Measuring wheel
	**9109, 6**	Measuring wheel for shaft diameter 6 mm
	**9110, 6**	Measuring wheel for shaft diameter 6 mm
	**9113, 6**	Measuring wheel for shaft diameter 6 mm

Release date: 2022-12-12 Date of issue: 2022-12-12 Filename: t185533_eng.pdf

Connection

Signal	Wire end	5-pin, M12 x 1 connector
CAN GND	green	1
$+V_S$	red	2
GND	yellow	3
CAN-High	white	4
CAN-Low	brown	5
Shielding	Shielding	Housing
Pinout		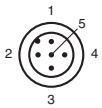

Interface

Example of the transmit commands

Command	Identifier	Data	Comments
Read request Direction	18EA2000	01 EF 00 00 00 00 00 00	
Read request Node	18EA2000	08 EF 00 00 00 00 00 00	
Write Direction	00EF2000	01 01 00 00 00 FF FF FF (CCW increase position)	When you change direction it will give you a different positional value. You will then need to set your preset value.
Write PRESET	00EF2000	04 A8 61 00 00 FF FF FF (value 25.000)	The preset value should be received at positional value 18FFAA20.
Write Save	00EF2000	FA 73 61 76 65 FF FF FF	The settings saved in non-volatile memory

If you change the node number, you will need to cycle power (after you save your settings) for the node number to change. Once you cycle power, you will need to enter the new node number in your identifier. You can confirm everything is saved in non-volatile memory by cycling power.

Receive:

18FFAA20: Positional and speed data

18EA2000: Read response

Type Code

Release date: 2022-12-12 Date of issue: 2022-12-12 Filename: t185533_eng.pdf

Model number

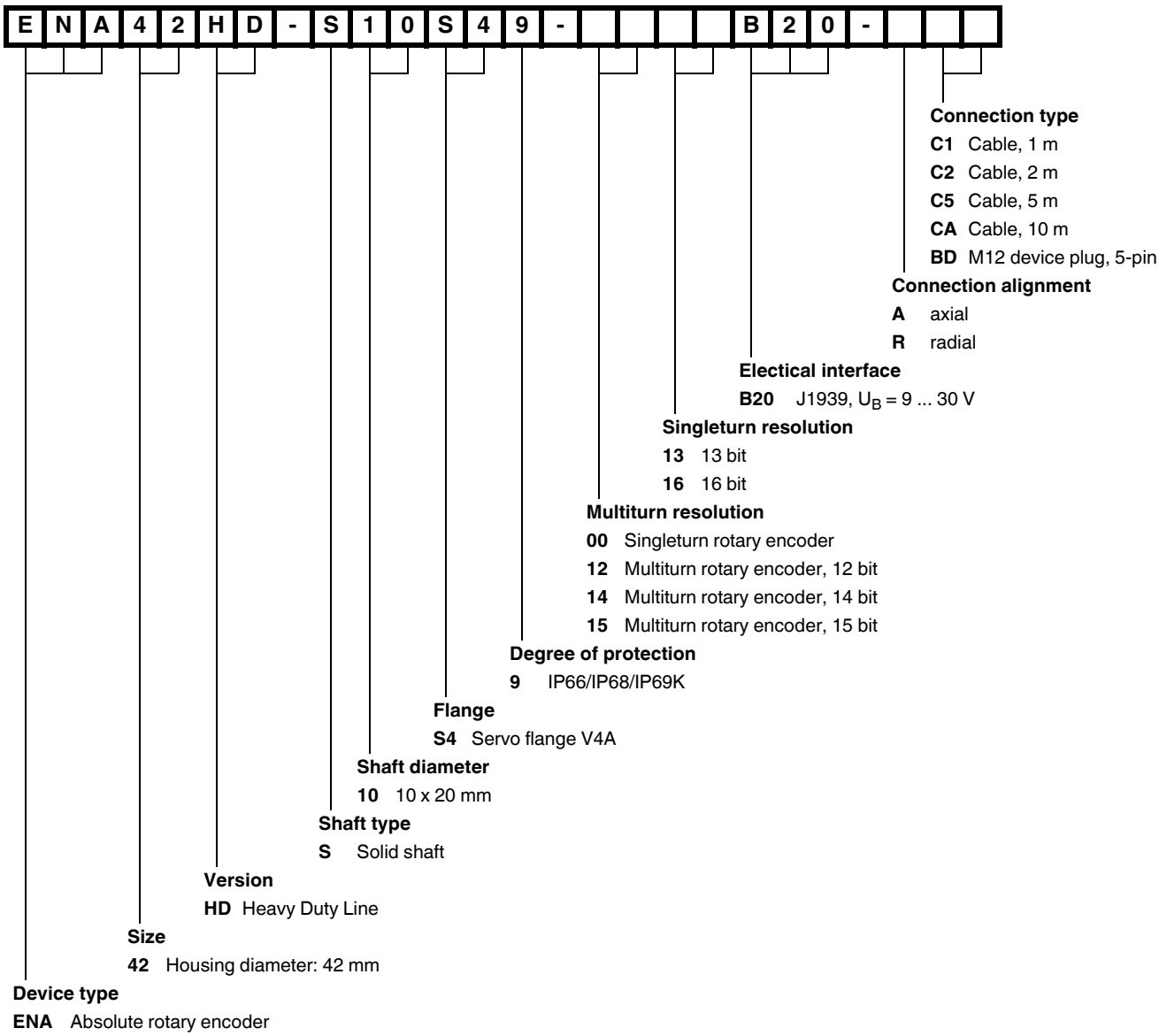

Installation

Anti-interference measures

The use of highly sophisticated microelectronics requires a consistently implemented anti-interference and wiring concept. This becomes all the more important the more compact the constructions are and the higher the demands are on the performance of modern machines.

The following installation instructions and proposals apply for "normal industrial environments". There is no ideal solution for all interfering environments.

When the following measures are applied, the encoder should be in perfect working order:

- Termination of the serial line with a 120 Ω resistor (between Receive/Transmit and Receive/Transmit) at the beginning and end of the serial line (e. g. the control and the last encoder).
- The wiring of the encoder should be laid at a large distance to energy lines which could cause interferences.
- Cable cross-section of the screen at least 4 mm^2.
- Cable cross-section at least 0,14 mm^2.
- The wiring of the screen and 0 V should be arranged radially, if and when possible.
- Do not kink or jam the cables.
- Adhere to the minimum bending radius as given in the data sheet and avoid tensile as well as shearing load.

Operating instructions

Every encoder manufactured by Pepperl+Fuchs leaves the factory in a perfect condition. In order to ensure this quality as well as a faultless operation, the following specifications have to be taken into consideration:

- Avoid any impact on the housing and in particular on the encoder shaft as well as the axial and radial overload of the encoder shaft.
- The accuracy and service life of the encoder is guaranteed only, if a suitable coupling is used.
- The operating voltage for the encoder and the follow-up device (e. g. control) has to be switched on and off simultaneously.
- Any wiring work has to be carried out with the system in a dead condition.
- The maximum operating voltages must not be exceeded. The devices have to be operated at extra-low safety voltage.

Notes on connecting the electric screening

The immunity to interference of a plant depends on the correct screening. In this field installation faults occur frequently. Often the screen is applied to one side only, and is then soldered to the earthing terminal with a wire, which is a valid procedure in LF engineering. However, in case of EMC the rules of HF engineering apply.

One basic goal in HF engineering is to pass the HF energy to earth at an impedance as low as possible as otherwise energy would discharge into the cable. A low impedance is achieved by a large-surface connection to metal surfaces.

The following instructions have to be observed:

- Apply the screen on both sides to a "common earth" in a large surface, if there is no risk of equipotential currents.
- The screen has to be passed behind the insulation and has to be clamped on a large surface below the tension relief.
- In case of cable connections to screw-type terminals, the tension relief has to be connected to an earthed surface.
- If plugs are used, metallised plugs only should be fitted (such as sub D plugs with metallised housing). Please observe the direct connection of the tension relief to the housing.

Advantage:	metalised connector, shield clamped with the strain relief clamp
Disadvantage:	soldering shield on

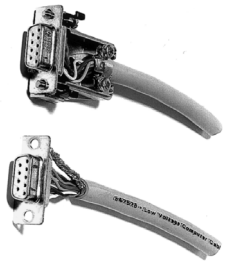

Safety instructions

Please observe the national safety and accident prevention regulations as well as the subsequent safety instructions in these operating instructions when working on encoders.

If failures cannot be remedied, the device has to be shut down and has to be secured against accidental operation.

Repairs may be carried out only by the manufacturer. Entry into and modifications of the device are not permissible.

Tighten the clamping ring only, if a shaft has been fitted in the area of the clamping ring (hollow shaft encoders).

Tighten all screws and plug connectors prior to operating the encoder.

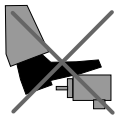

Do not stand on the encoder!

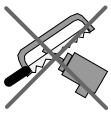

Do not remachine the drive shaft!

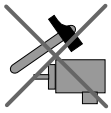

Avoid impact!

Do not remachine the housing!

Release date: 2022-12-12 Date of issue: 2022-12-12 Filename: t185533_eng.pdf