Singleturn absolute encoder

ASS58-H

- Industrial standard housing Ø58 mm
- 16 Bit singleturn
- Hardware encoder
- Data transfer up to 2 MBaud
- Optically isolated RS 422 interface
- Recessed hollow shaft

Function

This singleturn absolute encoder with modern fast technology transmits a position value corresponding to the shaft setting via the SSI interface (Synchronous Serial Interface). The resolution of the ASS58-H is maximum 65536 steps per revolution.
In contrast to the ASS58 series the encoder does not have a microcontroller. Thus, it is a pure hardware encoder.
The control module sends a clock bundle to the absolute encoder to obtain the position data. The rotary encoder then sends the position data synchronous to the cycles of the control module. It is possible to select the counting direction with the function input.
The absolute encoder is mounted directly onto the application shaft, without any coupling. Rotation of the absolute encoder is prevented by a torque rest.
The electrical connection is made by a 12-pin round plug connector. It is also possible to obtain a version with a 1 m cable connector.

Dimensions

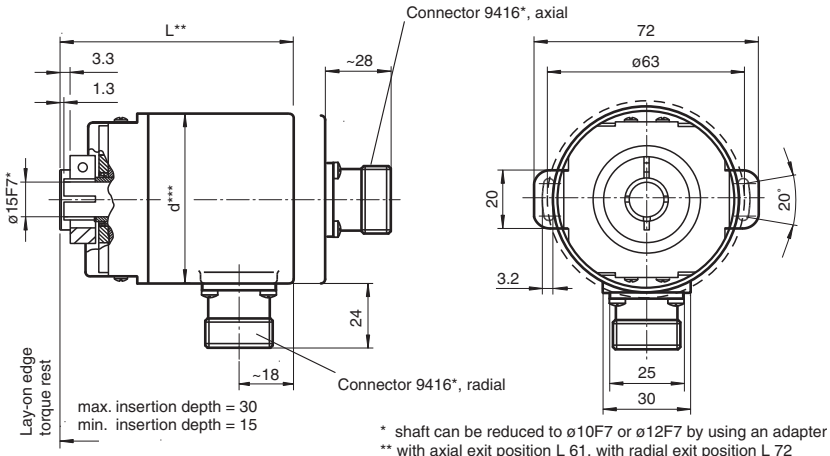

Recessed hollow shaft

* shaft can be reduced to ø10F7 or ø12F7 by using an adapter
** with axial exit position L 61, with radial exit position L 72
*** Aluminium: d = 59, stainless steel: d = 61

Release date: 2023-02-14 Date of issue: 2023-02-14 Filename: t49178_eng.pdf

Dimensions

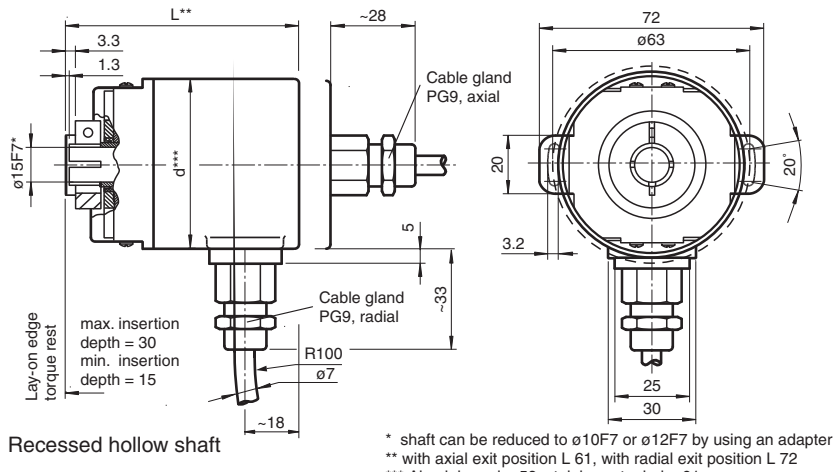

Recessed hollow shaft

* shaft can be reduced to ø10F7 or ø12F7 by using an adapter
** with axial exit position L 61, with radial exit position L 72
*** Aluminium: d = 59, stainless steel: d = 61

Technical Data

General specifications		
Detection type		photoelectric sampling
Device type		Singleturn absolute encoder
Electrical specifications		
Operating voltage	U_B	4.5 ... 30 V DC (SSI, SSI + RS422) ; 10 ... 30 V DC (SSI + Push/Pull)
No-load supply current	I_0	max. 180 mA
Time delay before availability	t_v	< 250 ms
Linearity		± 2 LSB at 16 Bit, ± 1 LSB at 13 Bit, ± 0,5 LSB at 12 Bit
Output code		Gray code, binary code
Code course (counting direction)		cw descending (clockwise rotation, code course descending)
Interface		
Interface type		SSI ; SSI + incremental track
Monoflop time		20 ± 10 µs
Resolution		
Single turn		up to 16 Bit
Overall resolution		up to 16 Bit
Transfer rate		0.1 ... 2 MBit/s
Voltage drop		U_B - 2.5 V
Standard conformity		RS 422
Input 1		
Input type		Selection of counting direction (cw/ccw)
Signal voltage		
High		4.5 ... 30 V
Low		0 ... 2 V
Input current		< 6 mA
Switch-on delay		< 10 ms
Connection		
Connector		type 9416 (M23), 12-pin, type 9416L (M23), 12-pin
Cable		Ø7 mm, 6 x 2 x 0.14 mm², 1 m
Standard conformity		
Degree of protection		DIN EN 60529, IP65 (without shaft seal) ; DIN EN 60529, IP66/IP67 (with shaft seal)
Climatic testing		DIN EN 60068-2-3, no moisture condensation
Emitted interference		DIN EN 61000-6-4
Noise immunity		DIN EN 61000-6-2
Shock resistance		DIN EN 60068-2-27, 100 *g*, 6 ms
Vibration resistance		DIN EN 60068-2-6, 20 *g*, 10 ... 2000 Hz

Release date: 2023-02-14 Date of issue: 2023-02-14 Filename: t49178_eng.pdf

Technical Data

Approvals and certificates	
UL approval	cULus Listed, General Purpose, Class 2 Power Source
Ambient conditions	
Operating temperature	-40 ... 85 °C (-40 ... 185 °F)
Storage temperature	-40 ... 85 °C (-40 ... 185 °F)
Mechanical specifications	
Material	
Combination 1	housing: powder coated aluminum flange: aluminum shaft: stainless steel
Combination 2 (Inox)	housing: stainless steel flange: stainless steel shaft: stainless steel
Mass	approx. 460 g (combination 1) approx. 800 g (combination 2)
Rotational speed	max. 12000 min^{-1}
Moment of inertia	50 gcm^2
Starting torque	< 5 Ncm
Shaft load	
Angle offset	± 0.9 °
Axial offset	static: ± 0.3 mm, dynamic: ± 0.1 mm
Radial offset	static: ± 0.5 mm, dynamic: ± 0.2 mm

Accessories

	**9416**	Female cordset
	**9416-*M-12P-AVM**	Female cordset, M23, 12-pin, PVC cable, 8-core
	**ACC-PACK-ABS-_S_58 ø15**	Accessories set for Ø58 absolut rotary encoder with recessed hollow shaft 15 mm
	**ACC-PACK-ABS-_S_58 ø14**	Accessories set for Ø58 absolut rotary encoder with recessed hollow shaft 14 mm
	**ACC-PACK-ABS-_S_58 ø12**	Accessories set for Ø58 absolut rotary encoder with recessed hollow shaft 12 mm
	**ACC-PACK-ABS-_S_58 ø10**	Accessories set for Ø58 absolut rotary encoder with recessed hollow shaft 10 mm

Release date: 2023-02-14 Date of issue: 2023-02-14 Filename: t49178_eng.pdf

Connection

Signal	Cable Ø7 mm, 12-core	Connector 9416, 12-pin	Connector 9416L, 12-pin	Explanation
GND (encoder)	White	1	1	Power supply
U_b (encoder)	Brown	2	8	Power supply
Clock (+)	Green	3	3	Positive cycle line
Clock (-)	Yellow	4	11	Negative cycle line
Data (+)	Grey	5	2	Positive transmission data
Data (-)	Pink	6	10	Negative transmission data
Reserved	Blue	7	12	Not wired, reserved
V/R	Red	8	5	Input for selection of counting direction
Reserved	Black	9	9	Not wired, reserved
Reserved	Violet	10	4	Not wired, reserved
Reserved	Grey/Pink	11	6	Not wired, reserved
Reserved	Red/Blue	12	7	Not wired, reserved
		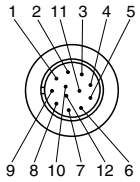	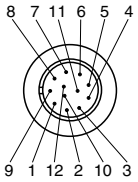	

Interface

Description

The Synchronous Serial Interface was specially developed for transferring the output data of an absolute encoder to a control device. The control module sends a clock bundle and the absolute encoder responds with the position value.

Thus only 4 lines are required for the clock and data, no matter what the resolution of the rotary encoder is. The RS 422 interface is optically isolated from the power supply.

SSI signal course Standard

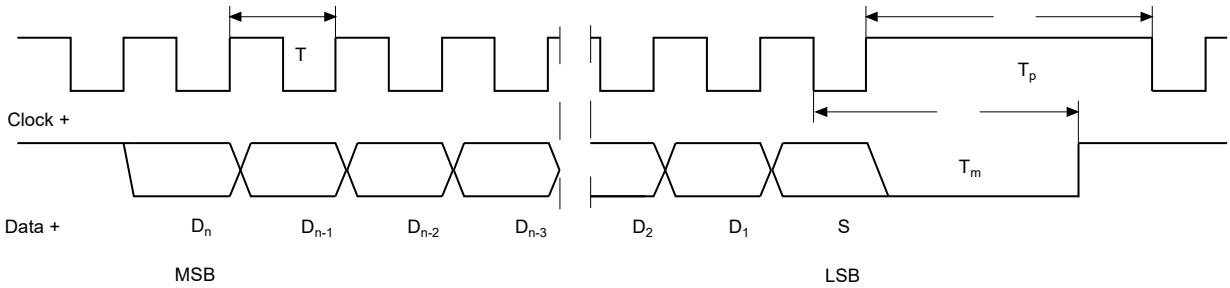

$D_1, ..., D_n$:	Position data	T = 1/f:	Duration of period of clock signal ≤ 1 MHz
S:	Special bit	T_m:	Monoflop time 10 µs ... 30 µs
MSB:	Most significant bit	T_p:	Clock pause ≥ monoflop time ($T_p \geq T_m$)
LSB:	Least significant bit		

SSI output format Standard

- At idle status signal lines "Data +" and "Clock +" are at high level (5 V).
- The first time the clock signal switches from high to low, the data transfer in which the current information (position data (D_n) and special bit (S)) is stored in the encoder is introduced.
- The highest order bit (MSB) is applied to the serial data output of the encoder with the first rising pulse edge.
- The next successive lower order bit is transferred with each following rising pulse edge.
- After the lowest order bit (LSB) has been transferred the data line switches to low until the monoflop time T_m has expired.
- No subsequent data transfer can be started until the data line switches to high again or the time for the clock pause T_p has expired.
- After the clock sequence is complete, the monoflop time T_m is triggered with the last falling pulse edge.
- The monoflop time T_m determines the lowest transmission frequency.

SSI output format ring slide operation (multiple transmission)

- In ring slide operation, multiple transmission of the same data word over the SSI interface makes it possible to offer the possibility of detecting transmission errors.
- In multiple transmission, 25 bits are transferred per data word in standard format.

Release date: 2023-02-14 Date of issue: 2023-02-14 Filename: t49178_eng.pdf

- If the clock change is not interrupted after the last falling pulse edge, ring slide operation automatically becomes active. This means that the information that was stored at the time of the first clock change is generated again.
- After the first transmission, the 26th pulse controls data repetition. If the 26th pulse follows after an amount of time greater than the monoflop time T_m, a new current data word will be transmitted with the following pulses.

If the pulse line is exchanged, the data word is generated offset.
Ring slide operation is possible up to max. 13 bits.

Block diagram

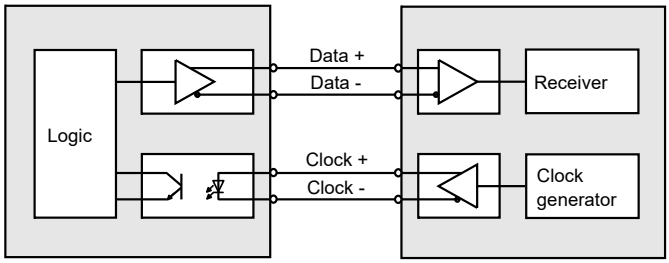

Line length

Line length in m	Baudrate in kHz
< 50	< 400
< 100	< 300
< 200	< 200
< 400	< 100

Input

The selection of the counting direction input (V/R) is activated with 0-level.

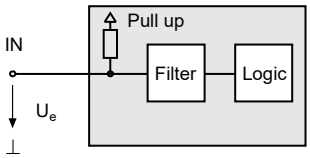

Type Code

Release date: 2023-02-14 Date of issue: 2023-02-14 Filename: t49178_eng.pdf

Order code

A	S	S	5	8		–							H			–	0	0		

Number of bits singleturn

12	4096 (standard)
13	8192
16	65536

Options

N	Standard
1	Incremental track 1024 pulses, Push/Pull
2	Incremental track 2048 pulses, Push/Pull
3	Incremental track 4096 pulses, Push/Pull
4	Incremental track 1024 pulses, RS422
5	Incremental track 2048 pulses, RS422
6	Incremental track 4096 pulses, RS422

Output code

B	Binary
G	Gray

Exit position

A	Axial
R	Radial

Connection type

K1	Cable Ø7 mm, 6 x 2 x 0.14 mm², 1 m
AA	Plug connector type 9416, 12-pin
AB	Plug connector type 9416L, 12-pin

Shaft dimension/flange version

F1A	Recessed hollow shaft Ø10 mm x 30 mm
F2A	Recessed hollow shaft Ø12 mm x 30 mm
F3A	Recessed hollow shaft Ø15 mm x 30 mm

Housing material

N	Aluminium, powder coated
I	Inox*
W	Aluminium, powder coated with shaft seal

Principle of operation

S	Singleturn

Shaft version

S	Recessed hollow shaft

Data format

A	SSI (Synchronous Serial Interface)

*Housing material I only available with axial exit position.

Release date: 2023-02-14 Date of issue: 2023-02-14 Filename: t49178_eng.pdf